# Ball Screw Drives

## General Environment

### MT4

| | |
|---|---|
| Max Stroke (mm) | 240 |
| Max Payload (KG) | 5 |
| Body Width (mm) | 45 |

### MT5

| | |
|---|---|
| Max Stroke (mm) | 600 |
| Max Payload (KG) | 10 |
| Body Width (mm) | 55 |

### MT6

| | |
|---|---|
| Max Stroke (mm) | 600 |
| Max Payload (KG) | 30 |
| Body Width (mm) | 55 |

### MF6N

| | |
|---|---|
| Max Stroke (mm) | 1,000 |
| Max Payload (KG) | 25 |
| Body Width (mm) | 60 |

### MF8

| | |
|---|---|
| Max Stroke (mm) | 1,000 |
| Max Payload (KG) | 35 |
| Body Width (mm) | 80 |

### MF10

| | |
|---|---|
| Max Stroke (mm) | 1,000 |
| Max Payload (KG) | 65 |
| Body Width (mm) | 100 |

### MF12

| | |
|---|---|
| Max Stroke (mm) | 1,200 |
| Max Payload (KG) | 84 |
| Body Width (mm) | 120 |

### MF14

| | |
|---|---|
| Max Stroke (mm) | 1,500 |
| Max Payload (KG) | 115 |
| Body Width (mm) | 140 |

Mach Motion Products

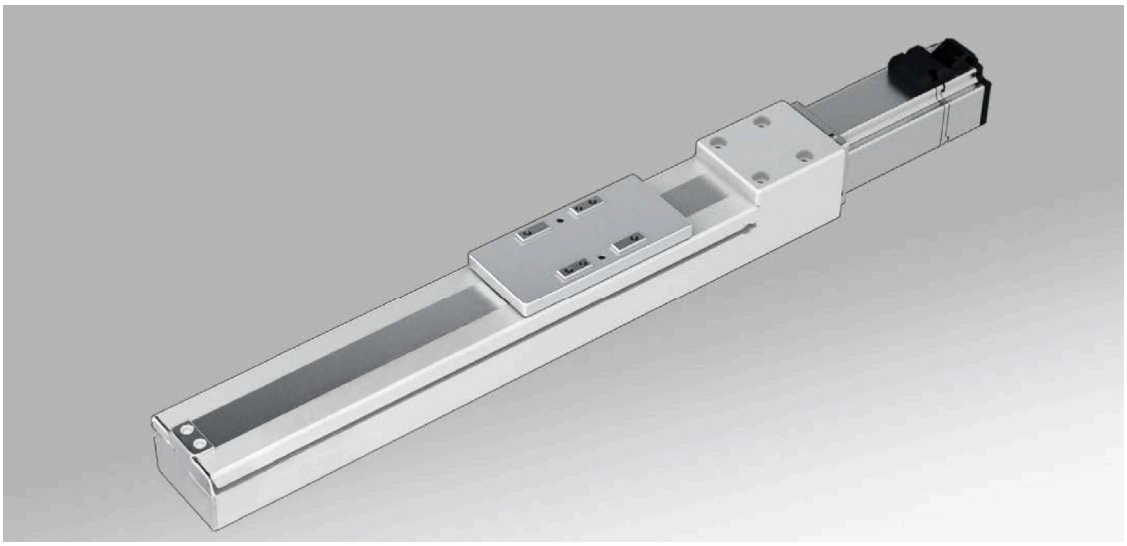

## Motor Mount Location

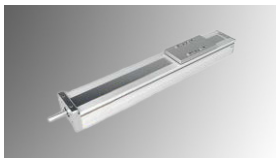

BA (Basic)

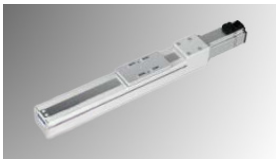

BC (Inline)

BL (Left Side)

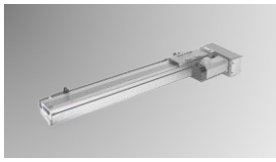

BR (Right Side)

## Model Selection Guide

**MT4 - L12 - P - S80 - BC - ZP10B - C 3 P**

| Base Style | |
|---|---|
| M | M Series |
| T | Fully Enclosed |
| 4 | Body Width 45mm |

| Ball Screw Lead | |
|---|---|
| L2 | 2mm |
| L12 | 12mm |

| Accuracy Class | |
|---|---|
| P | C5 Precision |
| C | C7 Accuracy |

| Stroke (mm) |
|---|
| 80-240mm |

| Motor Connection | |
|---|---|
| BA | Basic |
| BC | Inline |
| BR | Right Side |
| BL | Left Side |

| Motor Type | | Motor Power | |
|---|---|---|---|
| M | Mach Motion | 10 | 100W |
| Z | Client's Motor | 57 | 57-Ø8 |
| - | | | 57-Ø6.35 |
| Brake | | | |
| B | With Brake | None (No B) | No Brake |

| Sensor Switch | |
|---|---|
| 2 | 2 Pcs |
| 3 | 3 Pcs |

| Sensor Type | |
|---|---|
| P | PNP |
| None (No P) | NPN |

| Original Sensor Position | |
|---|---|
| External | |
| C | Motor Side |
| D | Opposite Motor Side |
| E | No Sensor |

## Technical Specifications

| | | | |
|---|---|---|---|
| Motor Power (W) | | 100W | |
| Ball Screw Diameter (mm) | | C7 | 8 |
| | | C5 | 8 |
| Repeatability (mm) | | C7 | ± 0.01 |
| | | C5 | ± 0.006 |
| Ball Screw Lead (mm) | | 2 | 12 |
| Max. Speed (mm/sec)<br>3000 Motor Speed (rpm/min) | | 100 | 600 |
| Maximum Payload (kg) | Horizontal | 5 | 3 |
| | Vertical | 1.5 | 1 |
| Rated Thrust (N) | | 900 | 150 |
| Linear Guide (mm) | | 24 x 8.5 - 1 | |
| Coupling (mm)<br>Motor Side x Ball Screw Side | | 5 x 8 | |
| Home Sensor - Outside | | EE-SX672(NPN) | |
| | | EE-SX672P(PNP) | |
| Home Sensor - Outside Guide | | EE-SX674(NPN) | |
| | | EE-SX674P(PNP) | |

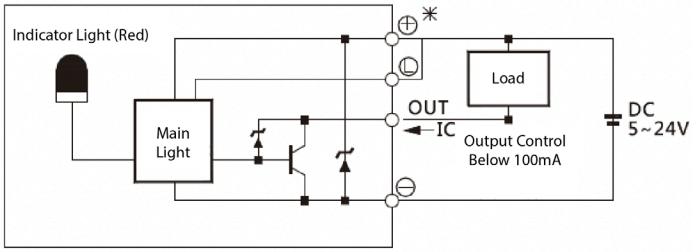


**Notes:**

**1. Motor acceleration and deceleration value is set to 0.2 seconds.**

**2. Repeatability is within 300mm stroke - longer stroke will result in lower value.**

**3. If stroke of 500mm+ leads to swing of ball screw, please reduce speed by 15%.**

## Maximum Static Torque

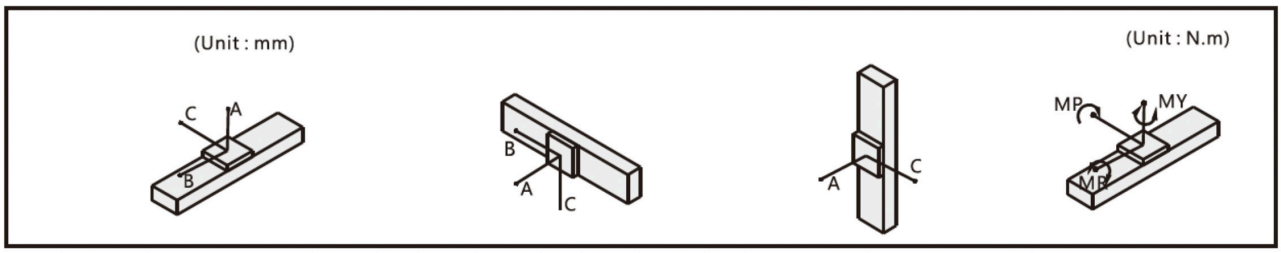


| Horizontal Installation | | A | B | C |
|---|---|---|---|---|
| Lead 12 | 1.5kg | 289 | 58 | 120 |
| | 3kg | 149 | 22 | 50 |

| Wall Installation | | A | B | C |
|---|---|---|---|---|
| Lead 12 | 1.5kg | 99 | 34 | 250 |
| | 3kg | 33 | 0.6 | 98 |

| Vertical Installation | | A | C |
|---|---|---|---|
| Lead 12 | 1kg | 83 | 83 |

| Max. Static Torque | |
|---|---|
| MY | 16 |
| MP | 20 |
| MR | 19 |

## BA (Basic):

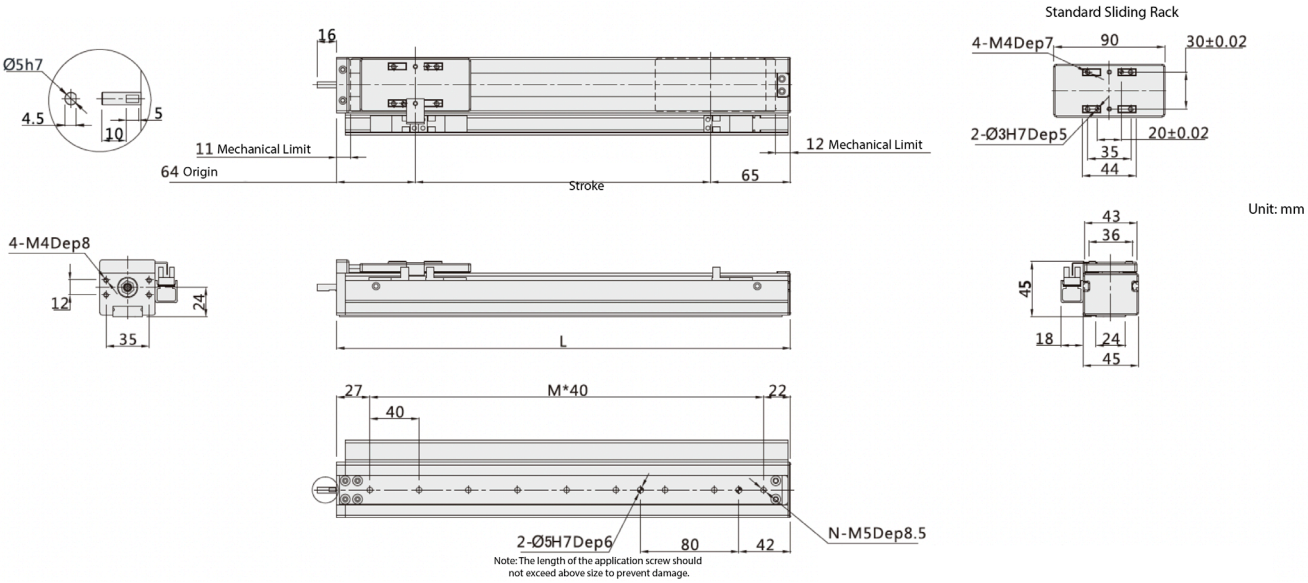


| Working Stroke | 80 | 120 | 160 | 200 | 240 |
|---|---|---|---|---|---|
| L | 209 | 249 | 289 | 329 | 369 |
| M | 4 | 5 | 6 | 7 | 8 |
| N | 5 | 6 | 7 | 8 | 9 |
| KG | 1.211 | 1.318 | 1.425 | 1.532 | 1.639 |

Note: does not include motor weight. Please contact orders@machmo.com for assistance if a custom stroke outside of above parameters is needed.

## BC (Inline):

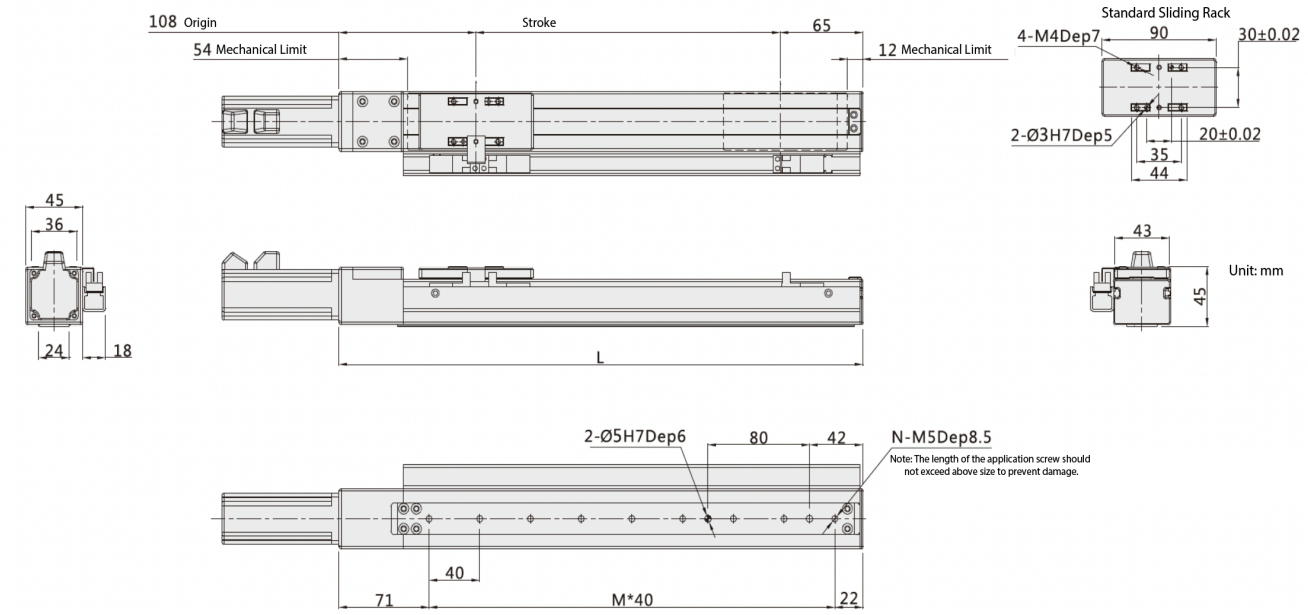


| Working Stroke | 80 | 120 | 160 | 200 | 240 |
|---|---|---|---|---|---|
| L | 253 | 293 | 333 | 373 | 413 |
| M | 4 | 5 | 6 | 7 | 8 |
| N | 5 | 6 | 7 | 8 | 9 |
| KG | 1.211 | 1.318 | 1.425 | 1.532 | 1.639 |

Note: does not include motor weight. Please contact orders@machmo com for assistance if a custom stroke outside of above parameters is needed.

## BL (Left Side):

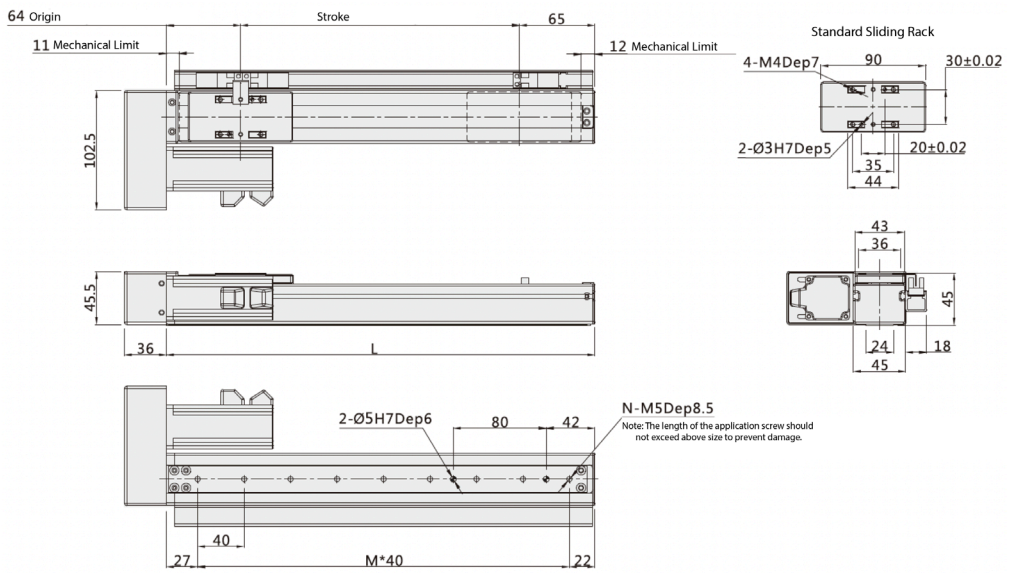


| Working Stroke | 80 | 120 | 160 | 200 | 240 |
|---|---|---|---|---|---|
| L | 209 | 249 | 289 | 329 | 369 |
| M | 4 | 5 | 6 | 7 | 8 |
| N | 5 | 6 | 7 | 8 | 9 |
| KG | 1.211 | 1.318 | 1.425 | 1.532 | 1.639 |

Note: does not include motor weight. Please contact orders@machmo.com for assistance if a custom stroke outside of above parameters is needed.

## BR (Right Side):

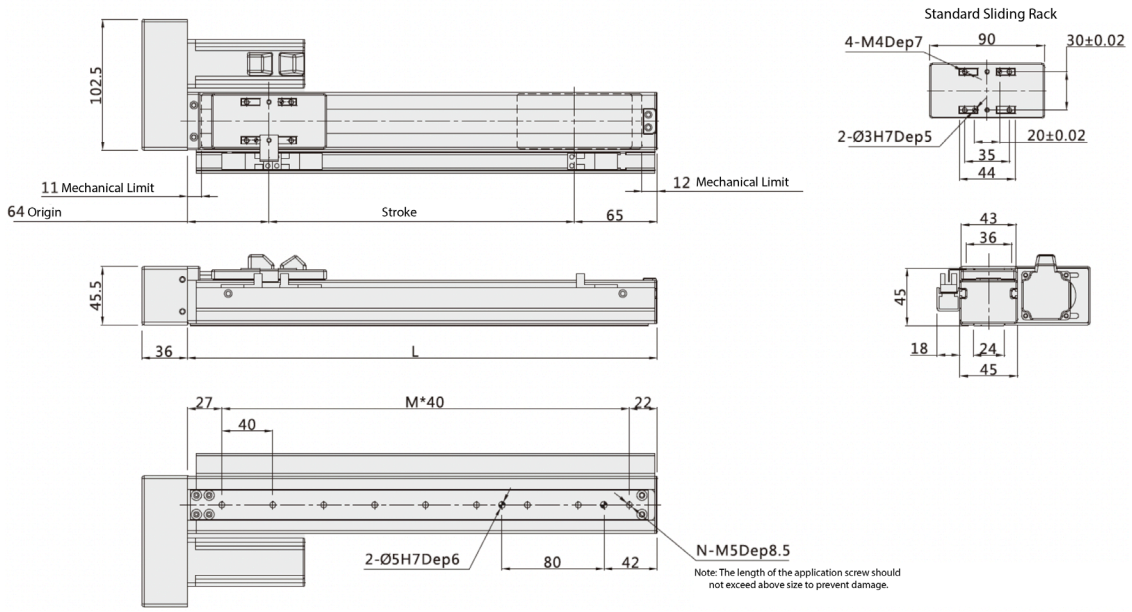


| Working Stroke | 80 | 120 | 160 | 200 | 240 |
|---|---|---|---|---|---|
| L | 209 | 249 | 289 | 329 | 369 |
| M | 4 | 5 | 6 | 7 | 8 |
| N | 5 | 6 | 7 | 8 | 9 |
| KG | 1.211 | 1.318 | 1.425 | 1.532 | 1.639 |

Note: does not include motor weight. Please contact orders@machmo.com for assistance if a custom stroke outside of above parameters is needed.

Mach Motion Products

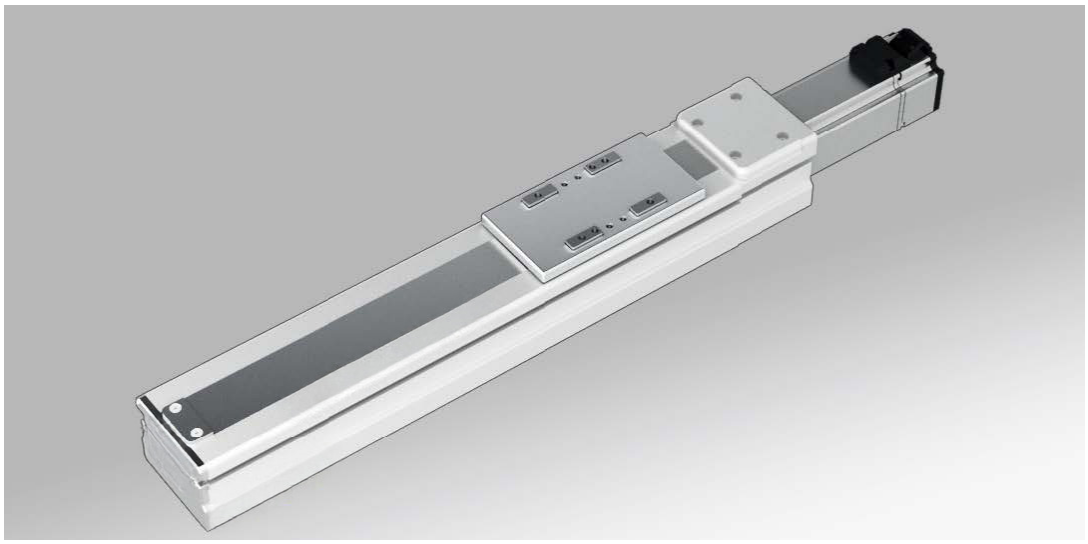

## Motor Mount Location

BA (Basic)

BC (Inline)

BL (Left Side)

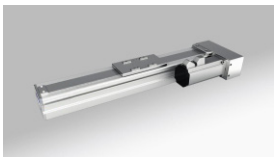

BR (Right Side)

## Model Selection Guide

**MT5 - L10 - P - S80 - BC - ZP10B - C 3 P**

| Base Style | |
|---|---|
| M | M Series |
| T | Fully Enclosed |
| 5 | Body Width 55mm |

| Ball Screw Lead | |
|---|---|
| L5 | 5mm |
| L10 | 10mm |

| Accuracy Class | |
|---|---|
| P | C5 Precision |
| C | C7 Accuracy |

| Stroke (mm) |
|---|
| 80-600mm |

| Motor Connection | |
|---|---|
| BA | Basic |
| BC | Inline |
| BR | Right Side |
| BL | Left Side |

| Motor Type | | Motor Power | |
|---|---|---|---|
| M | Mach Motion | 10 | 100W |
| Z | Client's Motor | 57 | 57-Ø8 |
| - | | | 57-Ø6.35 |
| Brake | | | |
| B | With Brake | None (No B) | No Brake |

| Sensor Switch | |
|---|---|
| 2 | 2 Pcs |
| 3 | 3 Pcs |

| Original Sensor Position | |
|---|---|
| External | |
| C | Motor Side |
| D | Opposite Motor Side |
| E | No Sensor |

| Sensor Type | |
|---|---|
| P | PNP |
| None (No P) | NPN |

## Technical Specifications

| | | | |
|---|---|---|---|
| Motor Power (W) | | 100W | |
| Ball Screw Diameter (mm) | | C7 | 12 |
| | | C5 | 12 |
| Repeatability (mm) | | C7 | ± 0.01 |
| | | C5 | ± 0.006 |
| Ball Screw Lead (mm) | | 5 | 10 |
| Max. Speed (mm/sec)<br>3000 Motor Speed (rpm/min) | | 250 | 500 |
| Maximum Payload (kg) | Horizontal | 10 | 5 |
| | Vertical | 3 | 1.5 |
| Rated Thrust (N) | | 330 | 170 |
| Linear Guide (mm) | | 24 x 8.5 - 1 | |
| Coupling (mm)<br>Motor Side x Ball Screw Side | | 8 x 8 | |
| Motor Output | | 100W | |
| Home Sensor - Outside | | EE-SX672(NPN) | EE-SX672P(PNP) |
| Home Sensor - Outside Guide | | EE-SX674(NPN) | EE-SX674P(PNP) |

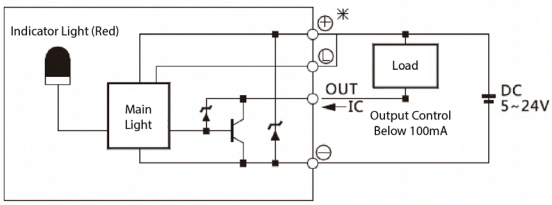


**Notes:**

**1. Motor acceleration and deceleration value is set to 0.2 seconds.**

**2. Repeatability is within 300mm stroke - longer stroke will result in lower value.**

**3. If stroke of 500mm+ leads to swing of ball screw, please reduce speed by 15%.**

## Maximum Static Torque

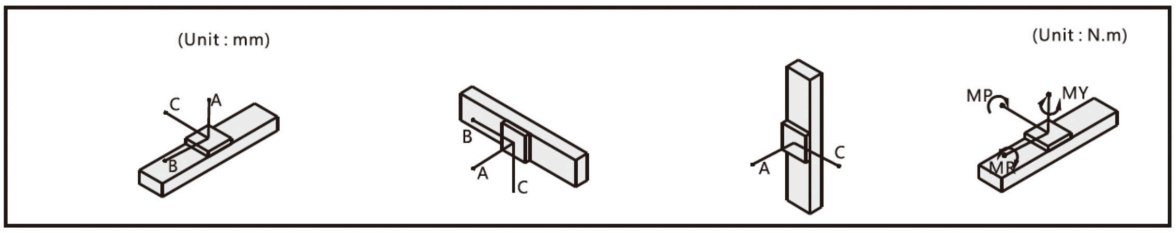


| Horizontal Installation | | A | B | C |
|---|---|---|---|---|
| Lead 5 | 4kg | 515 | 58 | 135 |
| | 7kg | 340 | 26 | 62 |
| Lead 10 | 3kg | 433 | 87 | 180 |
| | 5kg | 233 | 33 | 75 |

| Wall Installation | | A | B | C |
|---|---|---|---|---|
| Lead 5 | 4kg | 107 | 24 | 380 |
| | 7kg | 31 | 0 | 195 |
| Lead 10 | 3kg | 149 | 54 | 376 |
| | 5kg | 50 | 1 | 148 |

| Vertical Installation | | A | C |
|---|---|---|---|
| Lead 5 | 3kg | 56 | 57 |
| Lead 10 | 1.5kg | 125 | 125 |

| Max. Static Torque | |
|---|---|
| MY | 16 |
| MP | 20 |
| MR | 19 |

## BA (Basic):

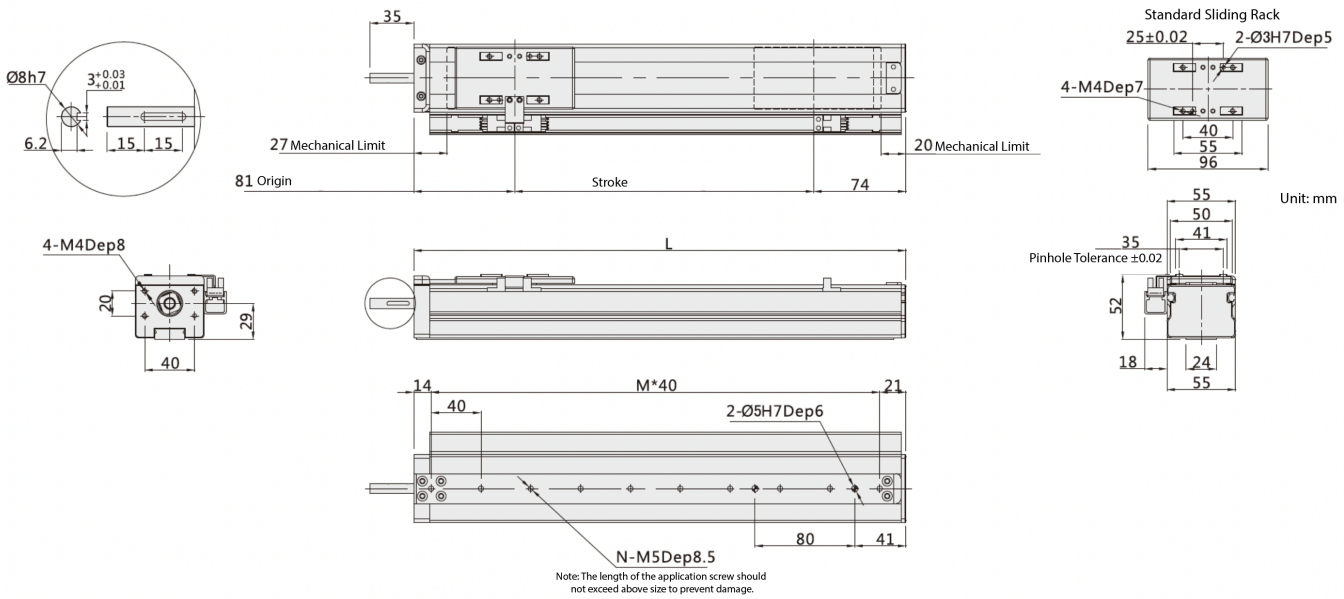


| Working Stroke | 80 | 120 | 160 | 200 | 240 | 280 | 320 | 360 | 400 | 440 | 480 | 520 | 560 | 600 |
|---|---|---|---|---|---|---|---|---|---|---|---|---|---|---|
| L | 235 | 275 | 355 | 355 | 395 | 435 | 475 | 515 | 555 | 595 | 635 | 675 | 715 | 755 |
| M | 5 | 6 | 7 | 8 | 9 | 10 | 11 | 12 | 13 | 14 | 15 | 16 | 17 | 18 |
| N | 6 | 7 | 8 | 9 | 10 | 11 | 12 | 13 | 14 | 15 | 13 | 17 | 18 | 19 |
| KG | 2.06 | 2.14 | 2.22 | 2.3 | 2.38 | 2.46 | 2.54 | 3.62 | 2.7 | 2.78 | 2.86 | 2.94 | 3.32 | 3.1 |

Note: does not include motor weight. Please contact orders@machmo.com for assistance if a custom stroke outside of above parameters is needed.

## BC (Inline):

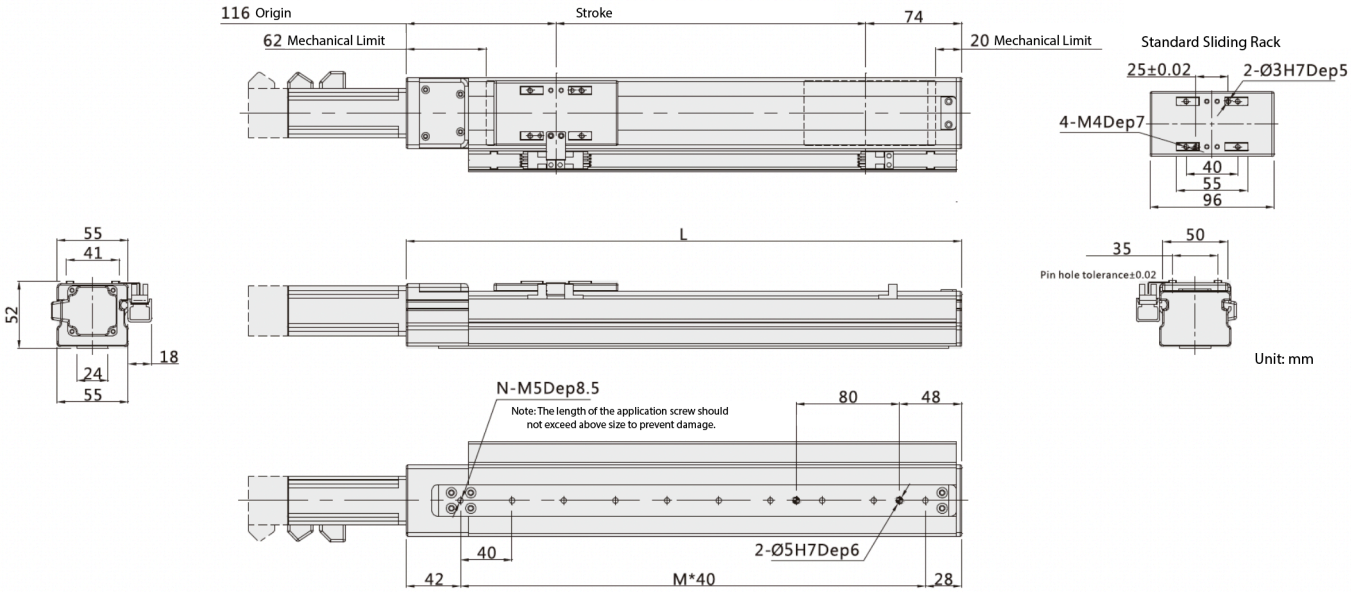


| Working Stroke | 80 | 120 | 160 | 200 | 240 | 280 | 320 | 360 | 400 | 440 | 480 | 520 | 560 | 600 |
|---|---|---|---|---|---|---|---|---|---|---|---|---|---|---|
| L | 270 | 310 | 350 | 390 | 430 | 470 | 510 | 550 | 590 | 630 | 670 | 710 | 750 | 790 |
| M | 5 | 6 | 7 | 8 | 9 | 10 | 11 | 12 | 13 | 14 | 15 | 16 | 17 | 18 |
| N | 6 | 7 | 8 | 9 | 10 | 11 | 12 | 13 | 14 | 15 | 13 | 17 | 18 | 19 |
| KG | 2.06 | 2.14 | 2.22 | 2.3 | 2.38 | 2.46 | 2.54 | 3.62 | 2.7 | 2.78 | 2.86 | 2.94 | 3.32 | 3.1 |

Note: does not include motor weight. Please contact orders@machmo.com for assistance if a custom stroke outside of above parameters is needed.

## BL (Left Side):

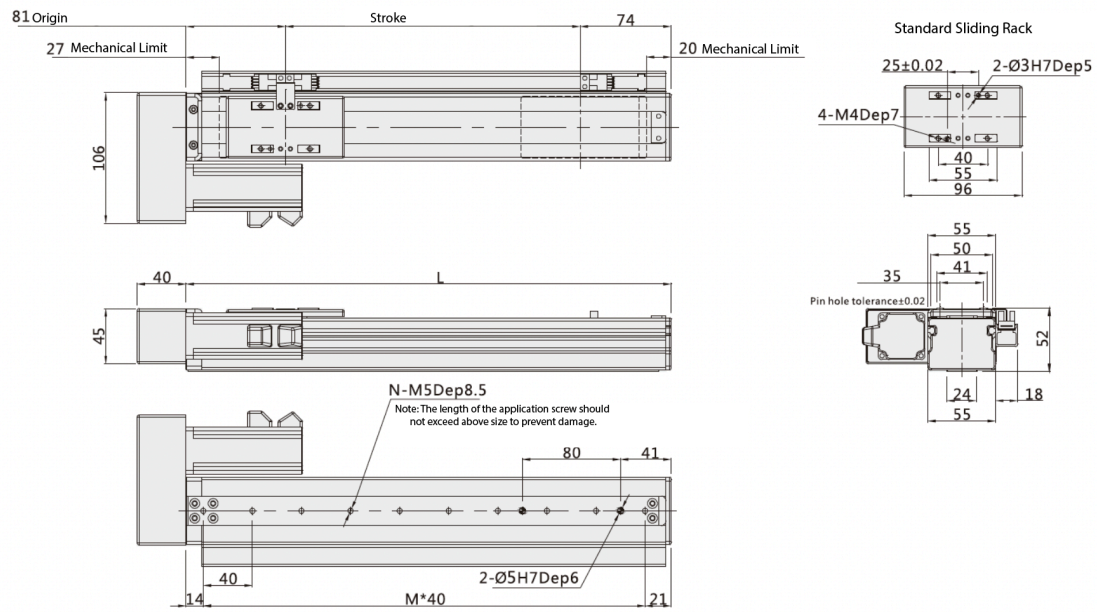


| Working Stroke | 80 | 120 | 160 | 200 | 240 | 280 | 320 | 360 | 400 | 440 | 480 | 520 | 560 | 600 |
|---|---|---|---|---|---|---|---|---|---|---|---|---|---|---|
| L | 235 | 275 | 355 | 355 | 395 | 435 | 475 | 515 | 555 | 595 | 635 | 675 | 715 | 755 |
| M | 5 | 6 | 7 | 8 | 9 | 10 | 11 | 12 | 13 | 14 | 15 | 16 | 17 | 18 |
| N | 6 | 7 | 8 | 9 | 10 | 11 | 12 | 13 | 14 | 15 | 13 | 17 | 18 | 19 |
| KG | 2.06 | 2.14 | 2.22 | 2.3 | 2.38 | 2.46 | 2.54 | 3.62 | 2.7 | 2.78 | 2.86 | 2.94 | 3.32 | 3.1 |

Note: does not include motor weight. Please contact orders@machmo.com for assistance if a custom stroke outside of above parameters is needed.

## BR (Right Side):

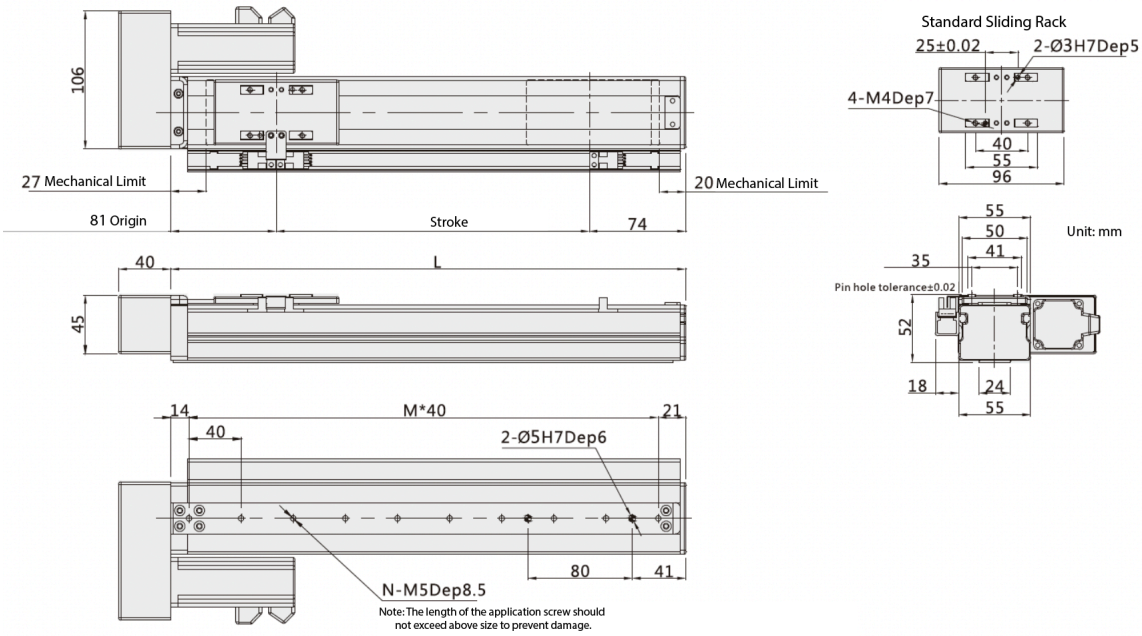


| Working Stroke | 80 | 120 | 160 | 200 | 240 | 280 | 320 | 360 | 400 | 440 | 480 | 520 | 560 | 600 |
|---|---|---|---|---|---|---|---|---|---|---|---|---|---|---|
| L | 235 | 275 | 355 | 355 | 395 | 435 | 475 | 515 | 555 | 595 | 635 | 675 | 715 | 755 |
| M | 5 | 6 | 7 | 8 | 9 | 10 | 11 | 12 | 13 | 14 | 15 | 16 | 17 | 18 |
| N | 6 | 7 | 8 | 9 | 10 | 11 | 12 | 13 | 14 | 15 | 13 | 17 | 18 | 19 |
| KG | 2.06 | 2.14 | 2.22 | 2.3 | 2.38 | 2.46 | 2.54 | 3.62 | 2.7 | 2.78 | 2.86 | 2.94 | 3.32 | 3.1 |

Note: does not include motor weight. Please contact orders@machmo.com for assistance if a custom stroke outside of above parameters is needed.

Mach Motion Products

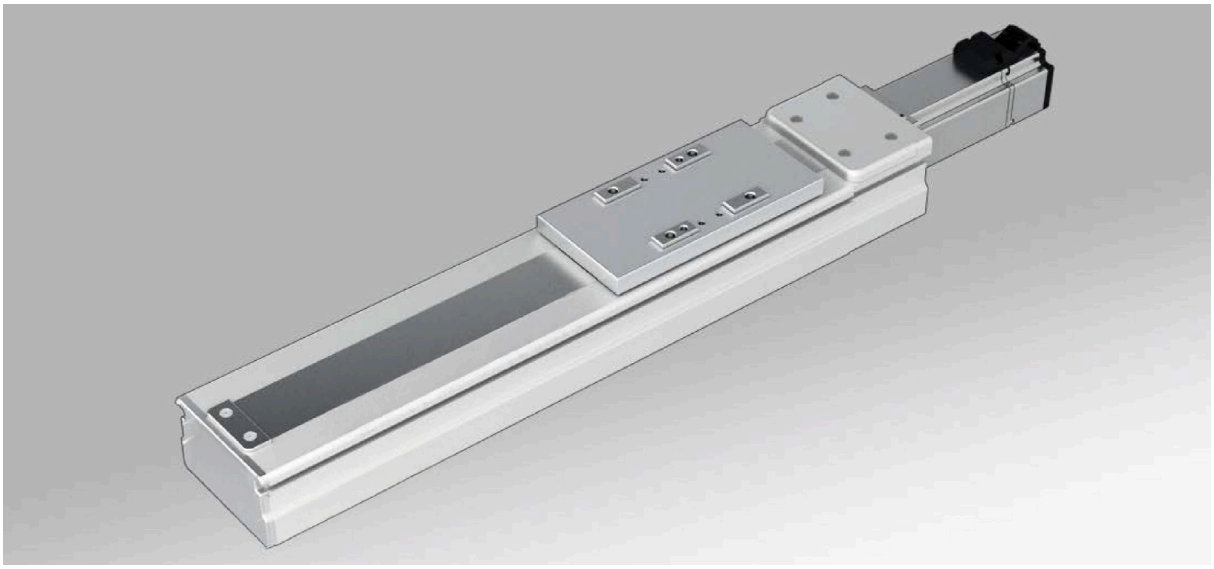

## Motor Mount Location

BA (Basic)

BC (Inline)

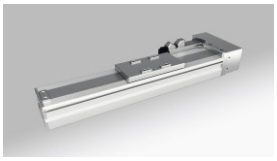

BL (Left Side)

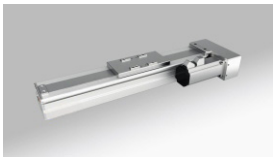

BR (Right Side)

## Model Selection Guide

**MT6 - L10 - P - S80 - BC - ZP10B - C 3 P**

| Base Style | |
|---|---|
| M | M Series |
| T | Fully Enclosed |
| 6 | Body Width 65mm |

| Ball Screw Lead | |
|---|---|
| L5 | 5mm |
| L10 | 10mm |

| Accuracy Class | |
|---|---|
| P | C5 Precision |
| C | C7 Accuracy |

| Stroke (mm) |
|---|
| 80-600mm |

| Motor Connection | |
|---|---|
| BA | Basic |
| BC | Inline |
| BR | Right Side |
| BL | Left Side |

| Motor Type | | Motor Power | |
|---|---|---|---|
| M | Mach Motion | 10 | 100W |
| Z | Client's Motor | 57 | 57-Ø8 |
| - | | | 57-Ø6.35 |
| Brake | | | |
| B | With Brake | None (No B) | No Brake |

| Sensor Switch | |
|---|---|
| 2 | 2 Pcs |
| 3 | 3 Pcs |

| Original Sensor Position | |
|---|---|
| External | |
| C | Motor Side |
| D | Opposite Motor Side |
| E | No Sensor |

| Sensor Type | |
|---|---|
| P | PNP |
| None (No P) | NPN |

## Technical Specifications

| | | | |
|---|---|---|---|
| Motor Power (W) | | 100W | |
| Ball Screw Diameter (mm) | | C7 | 12 |
| | | C5 | 12 |
| Repeatability (mm) | | C7 | ± 0.01 |
| | | C5 | ± 0.006 |
| Ball Screw Lead (mm) | | 5 | 10 |
| Max. Speed (mm/sec)<br>3000 Motor Speed (rpm/min) | | 250 | 500 |
| Maximum Payload (kg) | Horizontal | 30 | 15 |
| | Vertical | 10 | 5 |
| Rated Thrust (N) | | 330 | 165 |
| Linear Guide (mm) | | 42 x 9.5 - 1 | |
| Coupling (mm)<br>Motor Side x Ball Screw Side | | 8 x 10 | |
| Motor Output | | 100W | |
| Home Sensor - Outside | | EE-SX672(NPN) | EE-SX672P(PNP) |
| Home Sensor - Outside Guide | | EE-SX674(NPN) | EE-SX674P(PNP) |

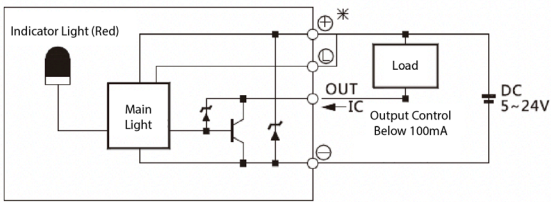


**Notes:**

**1. Motor acceleration and deceleration value is set to 0.2 seconds.**

**2. Repeatability is within 300mm stroke - longer stroke will result in lower value.**

**3. If stroke of 500mm+ leads to swing of ball screw, please reduce speed by 15%.**

## Maximum Static Torque

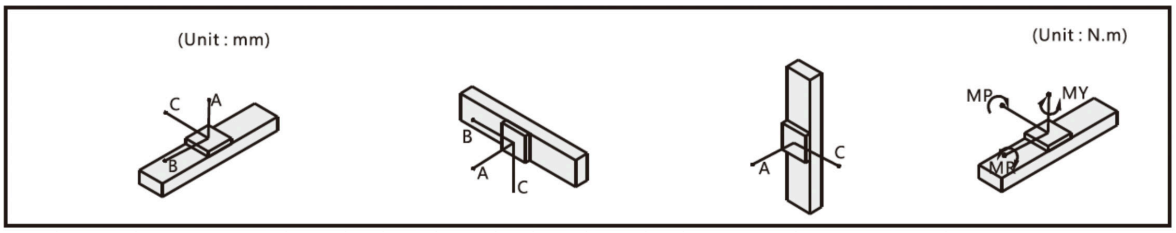


| Horizontal Installation | | A | B | C |
|---|---|---|---|---|
| Lead 5 | 10kg | 374 | 33 | 109 |
| | 30kg | 159 | 0 | 25 |
| Lead 10 | 3kg | 642 | 125 | 335 |
| | 8kg | 273 | 41 | 121 |
| | 15kg | 216 | 24 | 77 |

| Wall Installation | | A | B | C |
|---|---|---|---|---|
| Lead 5 | 5kg | 204 | 45 | 530 |
| | 10kg | 72 | 0 | 245 |
| | 30kg | 0 | 0 | 0 |
| Lead 10 | 3kg | 293 | 96 | 510 |
| | 8kg | 89 | 14 | 210 |
| | 15kg | 43 | 0 | 130 |

| Vertical Installation | | A | C |
|---|---|---|---|
| Lead 5 | 2kg | 171 | 172 |
| | 4kg | 73 | 74 |
| | 10kg | 23 | 26 |
| Lead 10 | 1kg | 335 | 352 |
| | 2kg | 165 | 165 |
| | 5kg | 70 | 72 |

| Max. Static Torque | |
|---|---|
| MY | 35 |
| MP | 40 |
| MR | 50 |

## BA (Basic):

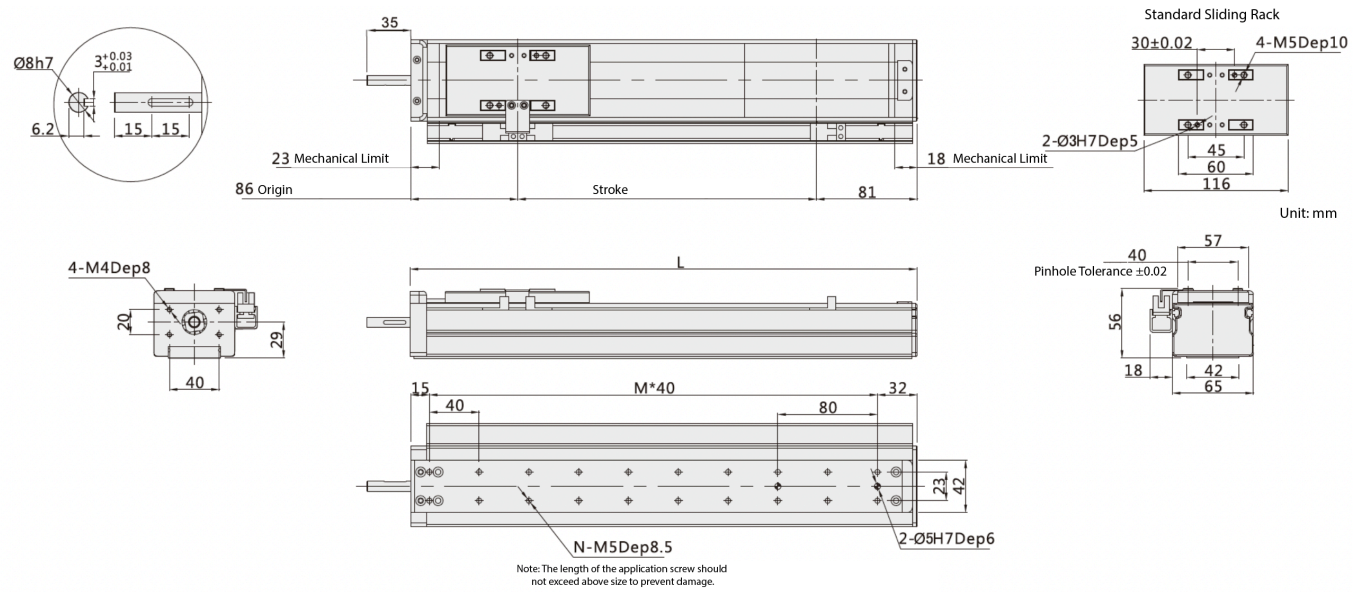


| Working Stroke | 80 | 120 | 160 | 200 | 240 | 280 | 320 | 360 | 400 | 440 | 480 | 520 | 560 | 600 |
|---|---|---|---|---|---|---|---|---|---|---|---|---|---|---|
| L | 247 | 287 | 327 | 367 | 407 | 447 | 487 | 527 | 567 | 607 | 647 | 687 | 727 | 767 |
| M | 5 | 6 | 7 | 8 | 9 | 10 | 11 | 12 | 13 | 14 | 15 | 16 | 17 | 18 |
| N | 12 | 14 | 16 | 18 | 20 | 22 | 24 | 26 | 28 | 30 | 32 | 34 | 36 | 38 |
| KG | 2.52 | 2.68 | 2.84 | 3 | 3.16 | 3.32 | 3.48 | 3.64 | 3.8 | 3.96 | 4.12 | 4.28 | 4.44 | 4.6 |

Note: does not include motor weight. Please contact orders@machmo com for assistance if a custom stroke outside of above parameters is needed.

## BC (Inline):

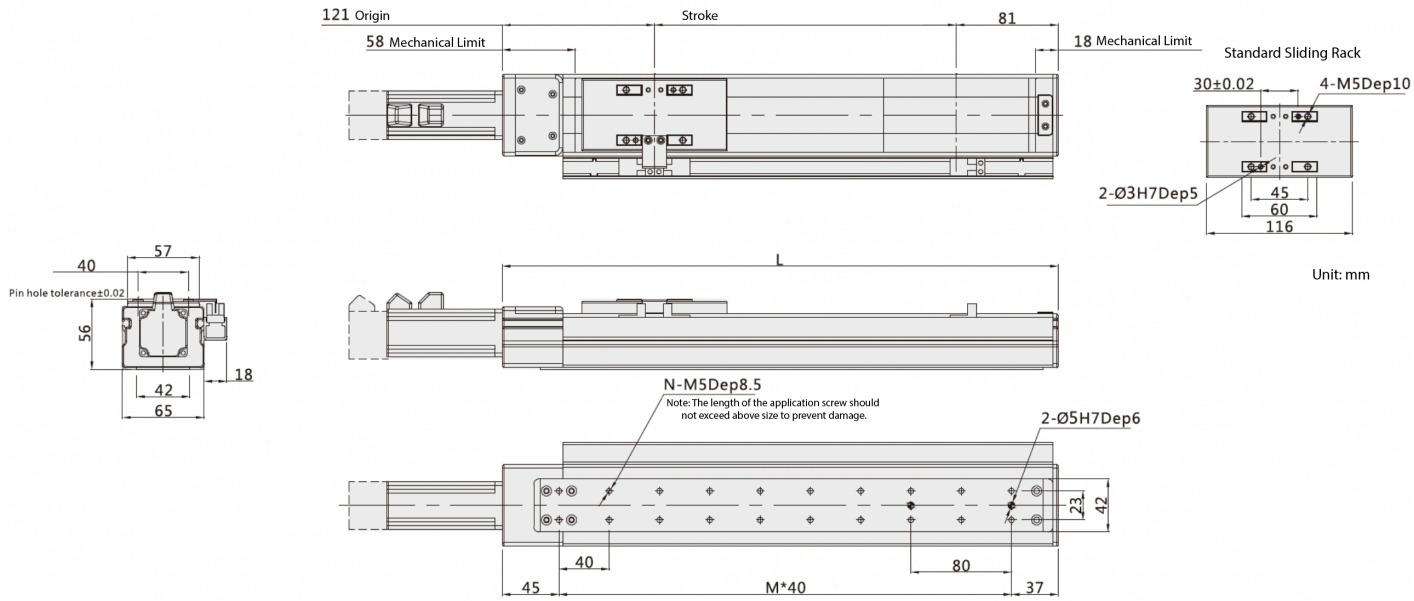


| Working Stroke | 80 | 120 | 160 | 200 | 240 | 280 | 320 | 360 | 400 | 440 | 480 | 520 | 560 | 600 |
|---|---|---|---|---|---|---|---|---|---|---|---|---|---|---|
| L | 282 | 322 | 362 | 402 | 442 | 482 | 522 | 562 | 602 | 642 | 682 | 722 | 762 | 802 |
| M | 5 | 6 | 7 | 8 | 9 | 10 | 11 | 12 | 13 | 14 | 15 | 16 | 17 | 18 |
| N | 12 | 14 | 16 | 18 | 20 | 22 | 24 | 26 | 28 | 30 | 32 | 34 | 36 | 38 |
| KG | 2.52 | 2.68 | 2.84 | 3 | 3.16 | 3.32 | 3.48 | 3.64 | 3.8 | 3.96 | 4.12 | 4.28 | 4.44 | 4.6 |

Note: does not include motor weight. Please contact orders@machmo.com for assistance if a custom stroke outside of above parameters is needed.

## BL (Left Side):

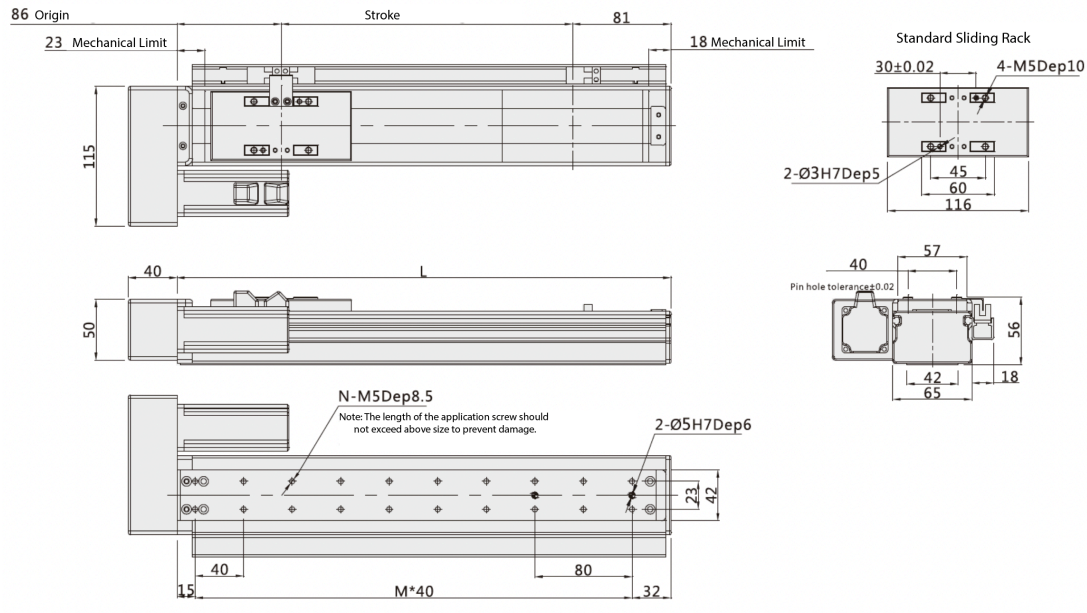


| Working Stroke | 80 | 120 | 160 | 200 | 240 | 280 | 320 | 360 | 400 | 440 | 480 | 520 | 560 | 600 |
|---|---|---|---|---|---|---|---|---|---|---|---|---|---|---|
| L | 247 | 287 | 327 | 367 | 407 | 447 | 487 | 527 | 567 | 607 | 647 | 687 | 727 | 767 |
| M | 5 | 6 | 7 | 8 | 9 | 10 | 11 | 12 | 13 | 14 | 15 | 16 | 17 | 18 |
| N | 12 | 14 | 16 | 18 | 20 | 22 | 24 | 26 | 28 | 30 | 32 | 34 | 36 | 38 |
| KG | 2.52 | 2.68 | 2.84 | 3 | 3.16 | 3.32 | 3.48 | 3.64 | 3.8 | 3.96 | 4.12 | 4.28 | 4.44 | 4.6 |

Note: does not include motor weight. Please contact orders@machmo.com for assistance if a custom stroke outside of above parameters is needed.

## BR (Right Side):

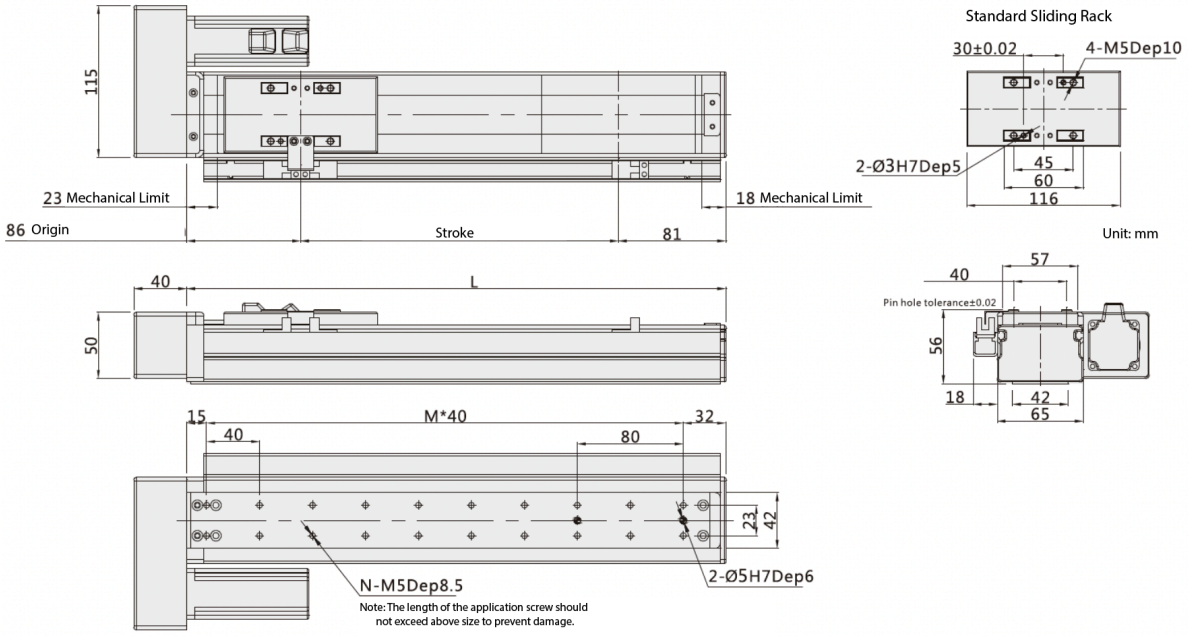


| Working Stroke | 80 | 120 | 160 | 200 | 240 | 280 | 320 | 360 | 400 | 440 | 480 | 520 | 560 | 600 |
|---|---|---|---|---|---|---|---|---|---|---|---|---|---|---|
| L | 247 | 287 | 327 | 367 | 407 | 447 | 487 | 527 | 567 | 607 | 647 | 687 | 727 | 767 |
| M | 5 | 6 | 7 | 8 | 9 | 10 | 11 | 12 | 13 | 14 | 15 | 16 | 17 | 18 |
| N | 12 | 14 | 16 | 18 | 20 | 22 | 24 | 26 | 28 | 30 | 32 | 34 | 36 | 38 |
| KG | 2.52 | 2.68 | 2.84 | 3 | 3.16 | 3.32 | 3.48 | 3.64 | 3.8 | 3.96 | 4.12 | 4.28 | 4.44 | 4.6 |

Note: does not include motor weight. Please contact orders@machmo.com for assistance if a custom stroke outside of above parameters is needed.

Mach Motion Products

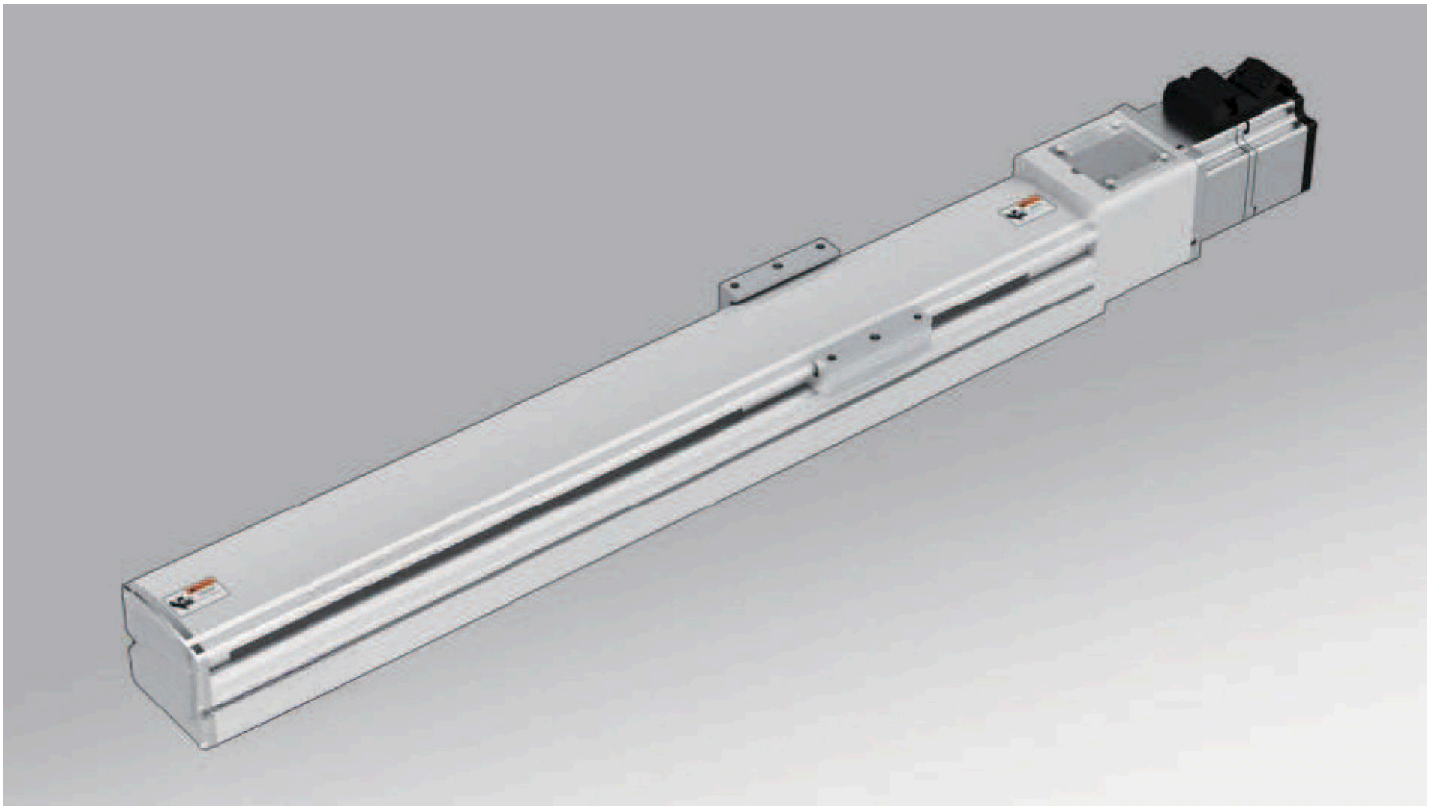

## Model Selection Guide

**MF6N - L16 - P - S100 - BC - ZP10B - C 3 P**

| Base Style | |
|---|---|
| M | M Series |
| F | Semi-Closed Frame |
| 6 | Body Width 60mm |

| Ball Screw Lead | |
|---|---|
| L5 | 5mm |
| L10 | 10mm |
| L16 | 16mm |
| L20 | 20mm |

| Accuracy Class | |
|---|---|
| P | C5 Precision |
| C | C7 Accuracy |

| Stroke (mm) |
|---|
| 60-1,140mm |

| Motor Connection | |
|---|---|
| BA | Basic |
| BC | Inline |
| BR | Right Side |
| BL | Left Side |

| Motor Type | | Motor Power | |
|---|---|---|---|
| M | Mach Motion | 10 | 100W |
| Z | Client's Motor | - | |
| Brake | | | |
| B | With Brake | None (No B) | No Brake |

| Sensor Switch | |
|---|---|
| 2 | 2 Pcs |
| 3 | 3 Pcs |

| Original Sensor Position | |
|---|---|
| External | |
| C | Motor Side |
| D | Opposite Motor Side |
| E | No Sensor |

| Sensor Type | |
|---|---|
| P | PNP |
| None (No P) | NPN |

## Technical Specifications

| | | | | | |
|---|---|---|---|---|---|
| Motor Power (W) | | 100W | | | |
| Ball Screw Diameter (mm) | | C7 | | 16 | |
| | | C5 | | 16 | |
| Repeatability (mm) | | C7 | | ± 0.01 | |
| | | C5 | | ± 0.006 | |
| Ball Screw Lead (mm) | | 5 | 10 | 16 | 20 |
| Max. Speed (mm/sec) 3000 Motor Speed (rpm/min) | | 250 | 500 | 800 | 1,000 |
| Maximum Payload (kg) | Horizontal | 30 | 25 | 20 | 15 |
| | Vertical | 10 | 7 | 4 | 2 |
| Rated Thrust (N) | | 330 | 165 | 100 | 85 |
| Linear Guide (mm) | | 15 x 12.5 - 1 | | | |
| Coupling (mm) Motor Side x Ball Screw Side | | 8 x 10 | | | |
| Motor Output | | 100W | | | |
| Home Sensor - Outside | | EE-SX672(NPN) | | EE-SX672P(PNP) | |
| Home Sensor - Outside Guide | | EE-SX674(NPN) | | EE-SX674P(PNP) | |

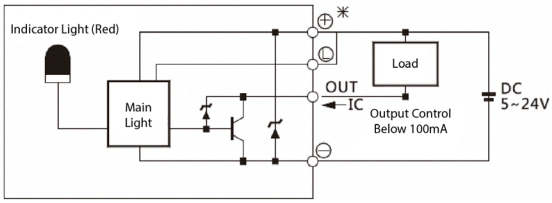


**Notes:**

**1. Motor acceleration and deceleration value is set to 0.2 seconds.**

**2. Repeatability is within 300mm stroke - longer stroke will result in lower value.**

**3. If stroke of 650mm+ leads to swing of ball screw, please reduce speed by 15%.**

## Maximum Static Torque

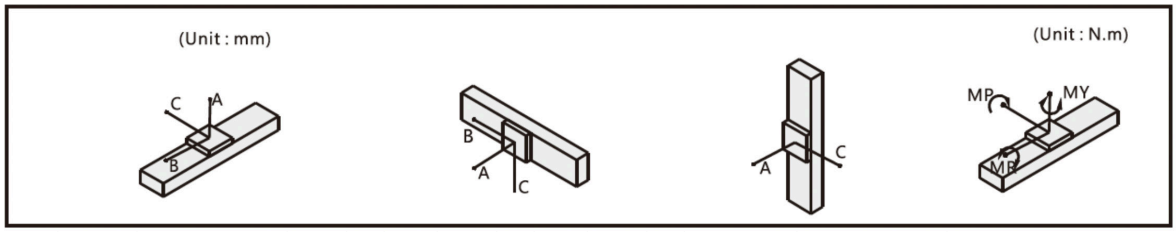


| Max. Static Torque | |
|---|---|
| MY | 54 |
| MP | 54 |
| MR | 72 |

| Horizontal Installation | | A | B | C |
|---|---|---|---|---|
| Lead 5 | 15kg | 140 | 120 | 80 |
| | 25kg | 119 | 91 | 76 |
| | 30kg | 66 | 47 | 27 |
| Lead 10 | 10kg | 139 | 114 | 94 |
| | 15kg | 80 | 61 | 35 |
| | 25kg | 40 | 15 | 10 |
| Lead 16 | 8kg | 335 | 29 | 180 |
| | 15kg | 236 | 150 | 130 |
| | 20kg | 165 | 51 | 42 |
| Lead 20 | 5kg | 301 | 150 | 115 |
| | 10kg | 188 | 105 | 85 |
| | 15kg | 132 | 95 | 38 |

| Wall Installation | | A | B | C |
|---|---|---|---|---|
| Lead 5 | 15kg | 25 | 65 | 130 |
| | 25kg | 15 | 50 | 85 |
| | 30kg | 0 | 0 | 10 |
| Lead 10 | 10kg | 55 | 100 | 150 |
| | 15kg | 15 | 50 | 70 |
| | 25kg | 0 | 10 | 25 |
| Lead 16 | 8kg | 85 | 65 | 200 |
| | 15kg | 50 | 95 | 135 |
| | 20kg | 5 | 25 | 60 |
| Lead 20 | 5kg | 40 | 50 | 110 |
| | 10kg | 30 | 15 | 80 |
| | 15kg | 0 | 0 | 20 |

| Vertical Installation | | A | C |
|---|---|---|---|
| Lead 5 | 6kg | 135 | 135 |
| | 8kg | 100 | 100 |
| | 10kg | 25 | 26 |
| Lead 10 | 2kg | 425 | 425 |
| | 4kg | 270 | 270 |
| | 7kg | 90 | 90 |
| Lead 16 | 1kg | 262 | 262 |
| | 3kg | 170 | 170 |
| | 4kg | 100 | 100 |
| Lead 20 | - | - | - |
| | 1kg | 205 | 205 |
| | 2kg | 136 | 136 |

## BA (Basic):

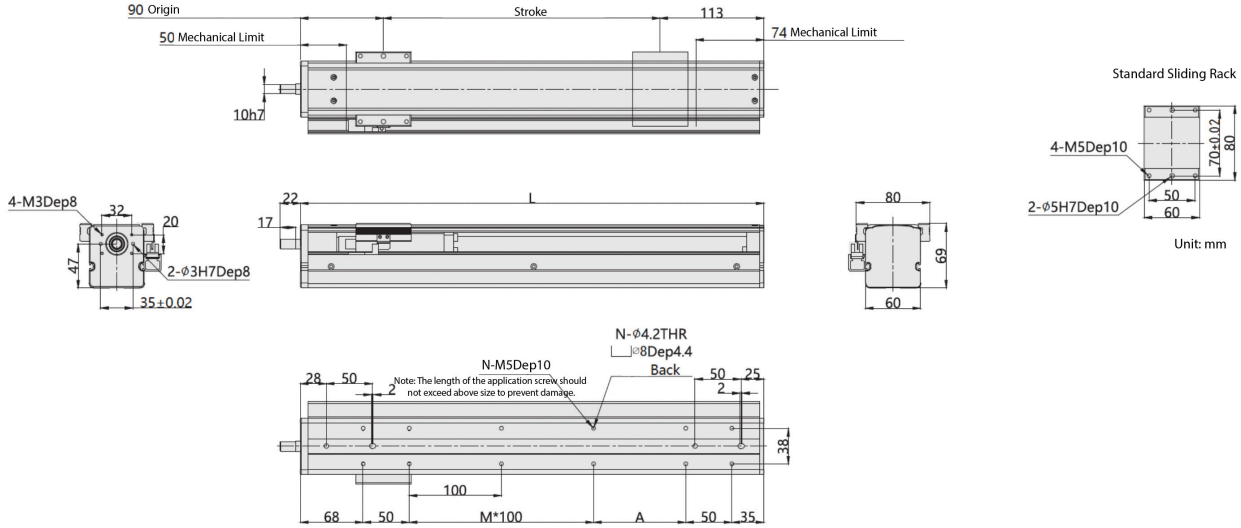


| Working Stroke | 100 | 150 | 200 | 250 | 300 | 350 | 400 | 450 | 500 | 550 | 600 | 650 | 700 | 750 | 800 | 850 | 900 | 950 | 1,000 |
|---|---|---|---|---|---|---|---|---|---|---|---|---|---|---|---|---|---|---|---|
| L | 303 | 353 | 403 | 453 | 503 | 553 | 603 | 653 | 703 | 753 | 803 | 853 | 903 | 953 | 1,003 | 1,053 | 1,103 | 1,153 | 1,203 |
| M | 0 | 1 | 1 | 2 | 2 | 3 | 3 | 4 | 4 | 5 | 5 | 6 | 6 | 7 | 7 | 8 | 8 | 9 | 9 |
| N | 8 | 10 | 10 | 12 | 12 | 14 | 14 | 16 | 16 | 18 | 18 | 20 | 20 | 22 | 22 | 24 | 24 | 26 | 26 |
| A | 100 | 50 | 100 | 50 | 100 | 50 | 100 | 50 | 100 | 50 | 100 | 50 | 100 | 50 | 100 | 50 | 100 | 50 | 100 |
| kg | 2.5 | 2.8 | 3.1 | 3.4 | 3.7 | 4 | 4.3 | 4.6 | 4.9 | 5.2 | 5.5 | 5.8 | 6.1 | 6.4 | 6.7 | 7 | 7.3 | 7.6 | 7.9 |

Note: does not include motor weight. Please contact orders@machmo.com for assistance if a custom stroke outside of above parameters is needed.

## BC (Inline):

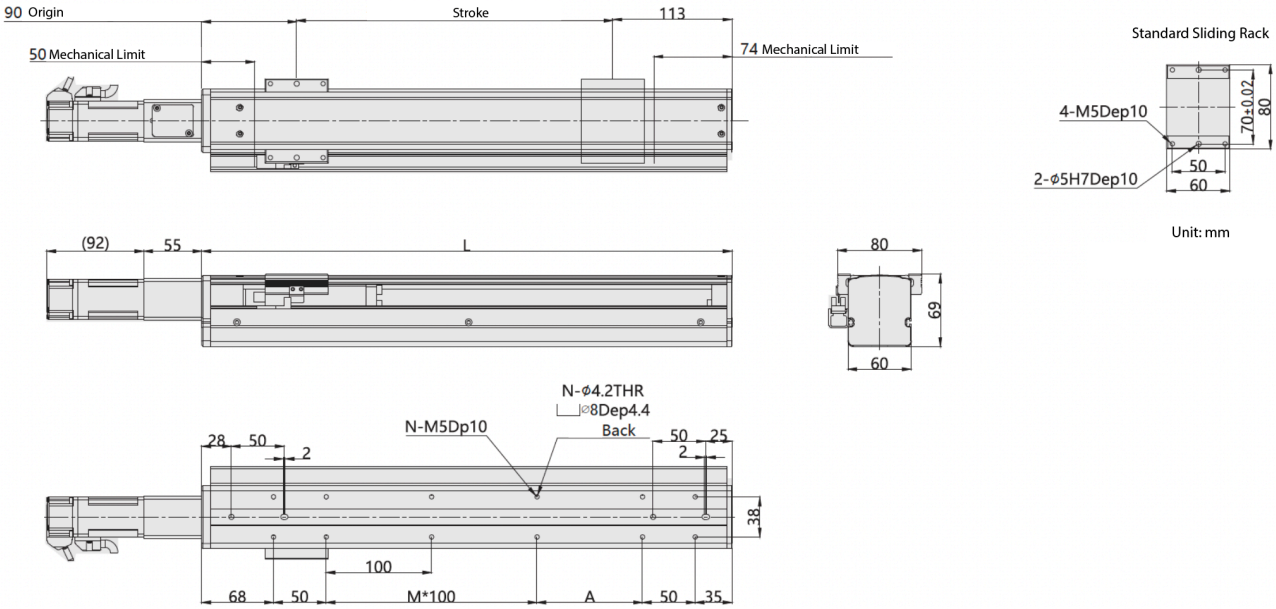


| Working Stroke | 100 | 150 | 200 | 250 | 300 | 350 | 400 | 450 | 500 | 550 | 600 | 650 | 700 | 750 | 800 | 850 | 900 | 950 | 1,000 |
|---|---|---|---|---|---|---|---|---|---|---|---|---|---|---|---|---|---|---|---|
| L | 303 | 353 | 403 | 453 | 503 | 553 | 603 | 653 | 703 | 753 | 803 | 853 | 903 | 953 | 1,003 | 1,053 | 1,103 | 1,153 | 1,203 |
| M | 0 | 1 | 1 | 2 | 2 | 3 | 3 | 4 | 4 | 5 | 5 | 6 | 6 | 7 | 7 | 8 | 8 | 9 | 9 |
| N | 8 | 10 | 10 | 12 | 12 | 14 | 14 | 16 | 16 | 18 | 18 | 20 | 20 | 22 | 22 | 24 | 24 | 26 | 28 |
| A | 100 | 50 | 100 | 50 | 100 | 50 | 100 | 50 | 100 | 50 | 100 | 50 | 100 | 50 | 100 | 50 | 100 | 50 | 100 |
| kg | 2.8 | 3.1 | 3.4 | 3.7 | 4 | 4.3 | 4.6 | 4.9 | 5.2 | 5.5 | 5.8 | 6.1 | 6.4 | 6.7 | 7 | 7.3 | 7.6 | 7.9 | 8.2 |

Note: does not include motor weight. Please contact orders@machmo.com for assistance if a custom stroke outside of above parameters is needed.

## BL (Left Side):

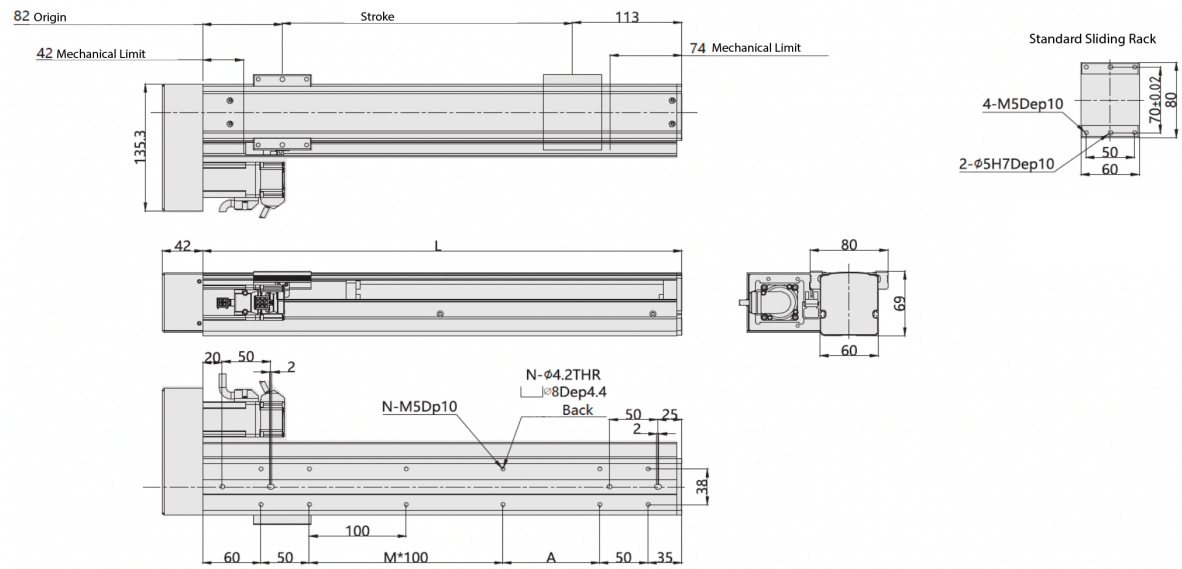


| Working Stroke | 100 | 150 | 200 | 250 | 300 | 350 | 400 | 450 | 500 | 550 | 600 | 650 | 700 | 750 | 800 | 850 | 900 | 950 | 1,000 |
|---|---|---|---|---|---|---|---|---|---|---|---|---|---|---|---|---|---|---|---|
| L | 295 | 345 | 395 | 445 | 495 | 545 | 595 | 645 | 695 | 745 | 795 | 845 | 895 | 945 | 995 | 1,045 | 1,095 | 1,145 | 1,195 |
| M | 0 | 1 | 1 | 2 | 2 | 3 | 3 | 4 | 4 | 5 | 5 | 6 | 6 | 7 | 7 | 8 | 8 | 9 | 9 |
| N | 8 | 10 | 10 | 12 | 12 | 14 | 14 | 16 | 16 | 18 | 18 | 20 | 20 | 22 | 22 | 24 | 24 | 26 | 26 |
| A | 100 | 50 | 100 | 50 | 100 | 50 | 100 | 50 | 100 | 50 | 100 | 50 | 100 | 50 | 100 | 50 | 100 | 50 | 100 |
| kg | 3.2 | 3.5 | 3.8 | 4.1 | 4.4 | 4.7 | 5 | 5.3 | 5.6 | 5.9 | 6.2 | 6.5 | 6.8 | 7.1 | 7.4 | 7.7 | 8 | 8.3 | 8.6 |

Note: does not include motor weight. Please contact orders@machmo.com for assistance if a custom stroke outside of above parameters is needed.

## BR (Right Side):

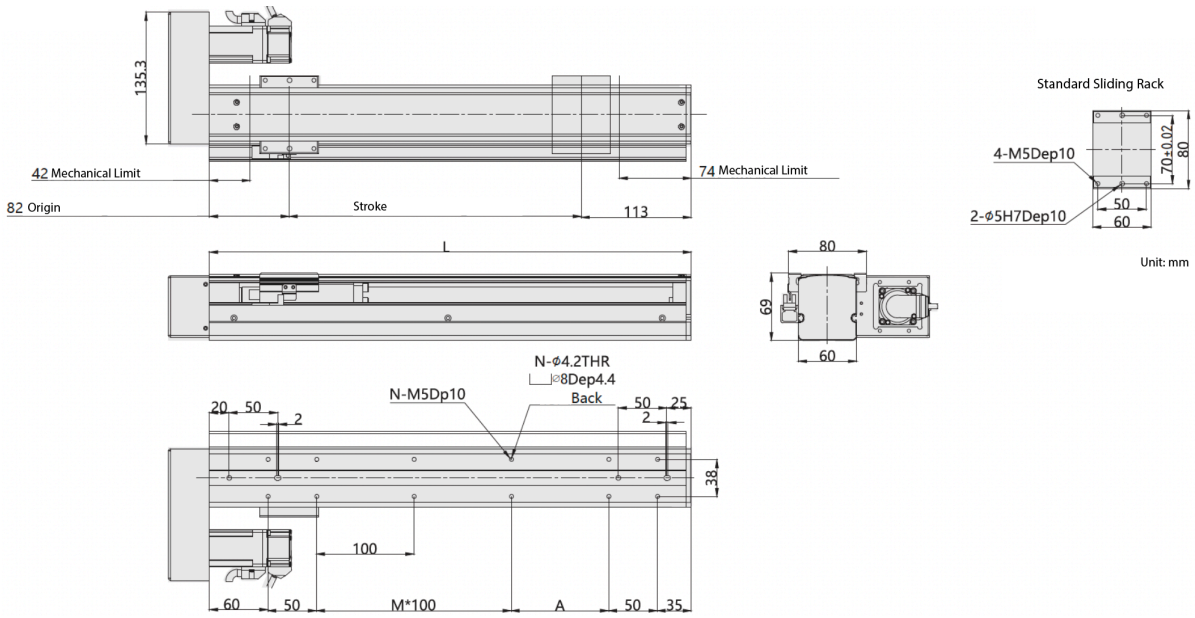


| Working Stroke | 100 | 150 | 200 | 250 | 300 | 350 | 400 | 450 | 500 | 550 | 600 | 650 | 700 | 750 | 800 | 850 | 900 | 950 | 1,000 |
|---|---|---|---|---|---|---|---|---|---|---|---|---|---|---|---|---|---|---|---|
| L | 295 | 345 | 395 | 445 | 495 | 545 | 595 | 645 | 695 | 745 | 795 | 845 | 895 | 945 | 995 | 1,045 | 1,095 | 1,145 | 1,195 |
| M | 0 | 1 | 1 | 2 | 2 | 3 | 3 | 4 | 4 | 5 | 5 | 6 | 6 | 7 | 7 | 8 | 8 | 9 | 9 |
| N | 8 | 10 | 10 | 12 | 12 | 14 | 14 | 16 | 16 | 18 | 18 | 20 | 20 | 22 | 22 | 24 | 24 | 26 | 26 |
| A | 100 | 50 | 100 | 50 | 100 | 50 | 100 | 50 | 100 | 50 | 100 | 50 | 100 | 50 | 100 | 50 | 100 | 50 | 100 |
| kg | 3.2 | 3.5 | 3.8 | 4.1 | 4.4 | 4.7 | 5 | 5.3 | 5.6 | 5.9 | 6.2 | 6.5 | 6.8 | 7.1 | 7.4 | 7.7 | 8 | 8.3 | 8.6 |

Note: does not include motor weight. Please contact orders@machmo.com for assistance if a custom stroke outside of above parameters is needed.

Mach Motion Products

## Motor Mount Location

BA (Basic)

BC (Inline)

BL (Left Side)

BR (Right Side)

## Model Selection Guide

**MF8 - L16 - P - S100 - BC - ZP10B - C 3 P**

| Base Style | |
|---|---|
| M | M Series |
| F | Semi-Closed Frame) |
| 8 | Body Width 80mm |

| Ball Screw Lead | |
|---|---|
| L5 | 5mm |
| L10 | 10mm |
| L16 | 16mm |
| L20 | 20mm |

| Accuracy Class | |
|---|---|
| P | C5 Precision |
| C | C7 Accuracy |

| Stroke (mm) |
|---|
| 100-1,000mm |

| Motor Connection | |
|---|---|
| BA | Basic |
| BC | Inline |
| BR | Right Side |
| BL | Left Side |

| Motor Type | | Motor Power | |
|---|---|---|---|
| M | Mach Motion | 10 | 100W |
| Z | Client's Motor | 20 | 200W |
| Brake | | 40 | 400W |
| B | With Brake | 57 | 57-Ø8 |
| None (No B) | No Brake | | 57-Ø6.35 |

| Sensor Switch | |
|---|---|
| 2 | 2 Pcs |
| 3 | 3 Pcs |

| Sensor Type | |
|---|---|
| P | PNP |
| None (No P) | NPN |

| Original Sensor Position | |
|---|---|
| External | |
| C | Motor Side |
| D | Opposite Motor Side |
| E | No Sensor |

## Technical Specifications

| | | | | | |
|---|---|---|---|---|---|
| Motor Power (W) | | 100W / 200W / 400W | | | |
| Ball Screw Diameter (mm) | | C7 | | 16 | |
| | | C5 | | 16 | |
| Repeatability (mm) | | C7 | | ± 0.01 | |
| | | C5 | | ± 0.006 | |
| Ball Screw Lead (mm) | | 5 | 10 | 16 | 20 |
| Max. Speed (mm/sec)<br>3000 Motor Speed (rpm/min) | | 250 | 500 | 800 | 1,000 |
| Maximum Payload (kg) | Horizontal | 20/30/35 | 20/25/30 | 18/22/27 | 15/17/22 |
| | Vertical | 8/10/12 | 7/9/11 | 5/7/9 | 3/5/6 |
| Rated Thrust (N) | | 330/683/1,388 | 165/341/694 | 100/213/433 | 85/174/347 |
| Linear Guide (mm) | | 42 x 9.5 -1 | | | |
| Coupling (mm)<br>Motor Side x Ball Screw Side | | 8 x 10 | 11 x 10 | 14 x 10 | 14 x 10 |
| Motor Output | | 100W | 200W | | 400W |
| Home Sensor - Outside | | EE-SX672(NPN) | | EE-SX672P(PNP) | |
| Home Sensor - Outside Guide | | EE-SX674(NPN) | | EE-SX674P(PNP) | |

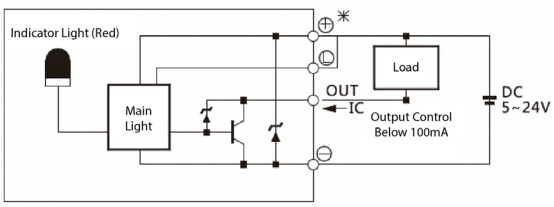


**Notes:**

**1. Motor acceleration and deceleration value is set to 0.2 seconds.**

**2. Repeatability is within 300mm stroke - longer stroke will result in lower value.**

**3. If stroke of 650mm+ leads to swing of ball screw, please reduce speed by 15%.**

## Maximum Static Torque

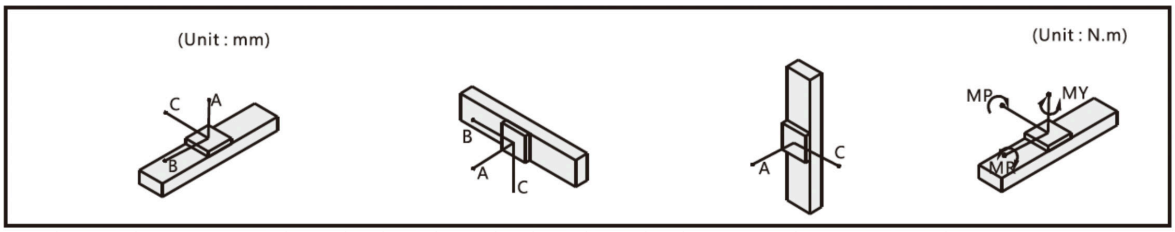


| Horizontal Installation | | A | B | C |
|---|---|---|---|---|
| Lead 5 | 15kg | 374 | 33 | 109 |
| | 25kg | 159 | 0 | 25 |
| | - | - | - | - |
| Lead 10 | 4kg | 624 | 125 | 335 |
| | 9kg | 273 | 41 | 121 |
| | 20kg | 50 | - | - |
| Lead 16 | 4kg | 737 | 182 | 159 |
| | 8kg | 387 | 80 | 97 |
| | 18kg | 90 | 30 | 35 |

| Wall Installation | | A | B | C |
|---|---|---|---|---|
| Lead 5 | 15kg | 204 | 45 | 530 |
| | 25kg | 72 | 0 | 245 |
| | - | - | - | - |
| Lead 10 | 4kg | 280 | 96 | 500 |
| | 9kg | 70 | 10 | 200 |
| | 20kg | 30 | 0 | 180 |
| Lead 16 | 4kg | 80 | 30 | 300 |
| | 8kg | 15 | 0 | 130 |
| | 18kg | 0 | 0 | 0 |

| Vertical Installation | | A | C |
|---|---|---|---|
| Lead 5 | 4kg | 100 | 145 |
| | 6kg | 50 | 74 |
| | 8kg | 23 | 26 |
| Lead 10 | 3kg | 335 | 350 |
| | 5kg | 140 | 160 |
| | 7kg | 70 | 72 |
| Lead 16 | 1kg | 372 | 418 |
| | 2kg | 166 | 202 |
| | 5kg | 113 | 159 |

| Max. Static Torque | | |
|---|---|---|
| MY | MP | MR |
| 100 | 100 | 110 |

## BA (Basic):

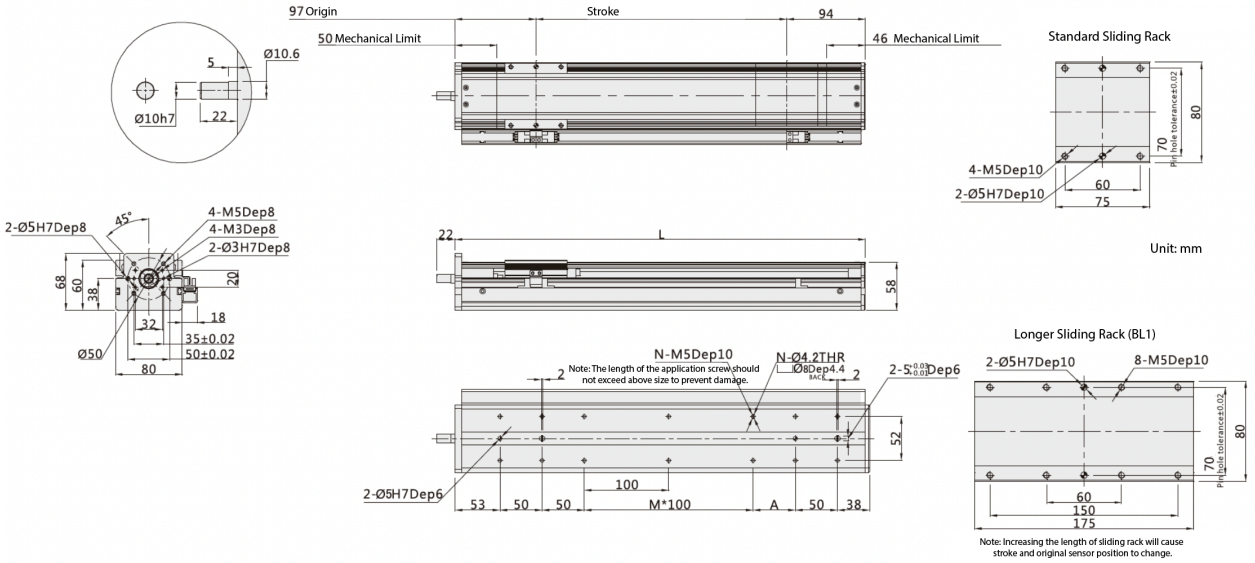


| Working Stroke | 100 | 150 | 200 | 250 | 300 | 350 | 400 | 450 | 500 | 550 | 600 | 650 | 700 | 750 | 800 | 850 | 900 | 950 | 1,000 |
|---|---|---|---|---|---|---|---|---|---|---|---|---|---|---|---|---|---|---|---|
| L | 291 | 341 | 391 | 441 | 491 | 541 | 591 | 641 | 691 | 741 | 791 | 841 | 891 | 941 | 991 | 1,041 | 1,091 | 1,141 | 1,191 |
| M | 0 | 0 | 1 | 1 | 2 | 2 | 3 | 3 | 4 | 4 | 5 | 5 | 6 | 6 | 7 | 7 | 8 | 8 | 9 |
| N | 10 | 10 | 12 | 12 | 14 | 14 | 16 | 16 | 18 | 18 | 20 | 20 | 22 | 22 | 24 | 24 | 26 | 26 | 28 |
| A | 50 | 100 | 50 | 100 | 50 | 100 | 50 | 100 | 50 | 100 | 50 | 100 | 50 | 100 | 50 | 100 | 50 | 100 | 50 |
| kg | 3.1 | 3.5 | 3.9 | 4.3 | 4.7 | 5.1 | 5.5 | 5.9 | 6.3 | 6.7 | 7.1 | 7.5 | 7.9 | 8.3 | 8.7 | 9.1 | 9.5 | 9.9 | 10.3 |

Note: does not include motor weight. Please contact orders@machmo.com for assistance if a custom stroke outside of above parameters is needed.

## BC (Inline):

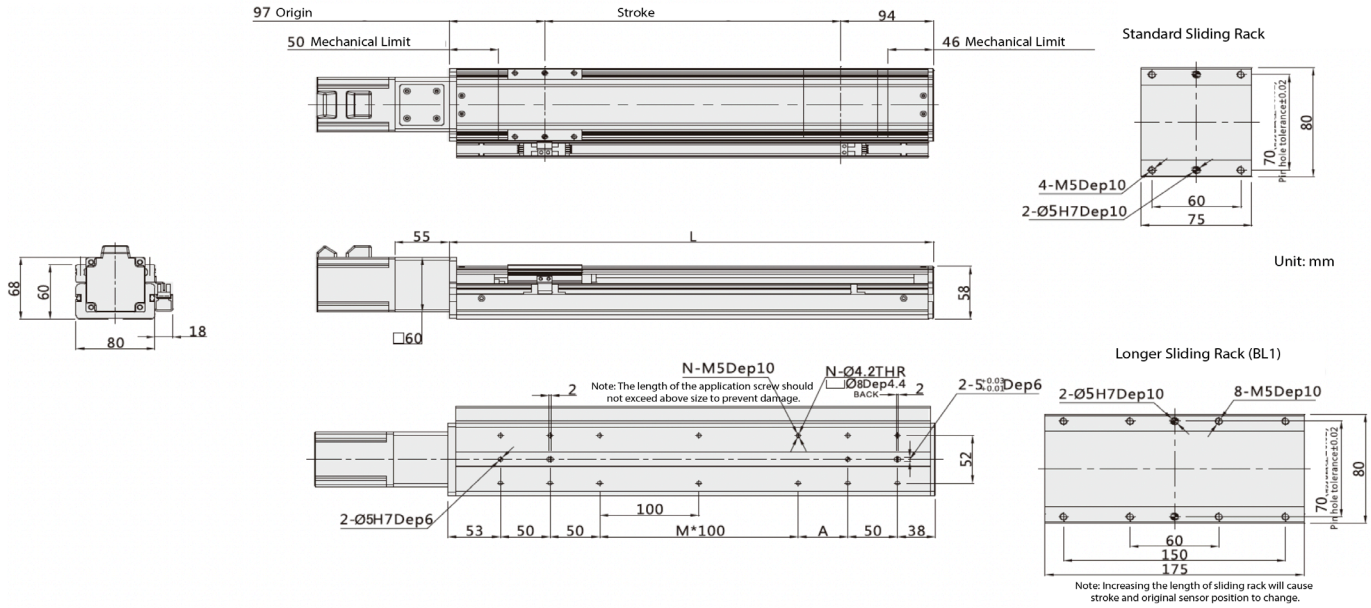


| Working Stroke | 100 | 150 | 200 | 250 | 300 | 350 | 400 | 450 | 500 | 550 | 600 | 650 | 700 | 750 | 800 | 850 | 900 | 950 | 1,000 |
|---|---|---|---|---|---|---|---|---|---|---|---|---|---|---|---|---|---|---|---|
| L | 291 | 341 | 391 | 441 | 491 | 541 | 591 | 641 | 691 | 741 | 791 | 841 | 891 | 941 | 991 | 1,041 | 1,091 | 1,141 | 1,191 |
| M | 0 | 0 | 1 | 1 | 2 | 2 | 3 | 3 | 4 | 4 | 5 | 5 | 6 | 6 | 7 | 7 | 8 | 8 | 9 |
| N | 10 | 10 | 12 | 12 | 14 | 14 | 16 | 16 | 18 | 18 | 20 | 20 | 22 | 22 | 24 | 24 | 26 | 26 | 28 |
| A | 50 | 100 | 50 | 100 | 50 | 100 | 50 | 100 | 50 | 100 | 50 | 100 | 50 | 100 | 50 | 100 | 50 | 100 | 50 |
| kg | 3.4 | 3.8 | 4.2 | 4.6 | 5 | 5.4 | 5.8 | 6.2 | 6.6 | 7 | 7.4 | 7.8 | 8.2 | 8.6 | 9 | 9.4 | 9.8 | 10.2 | 10.6 |

Note: does not include motor weight. Please contact orders@machmo.com for assistance if a custom stroke outside of above parameters is needed.

## BL (Left Side):

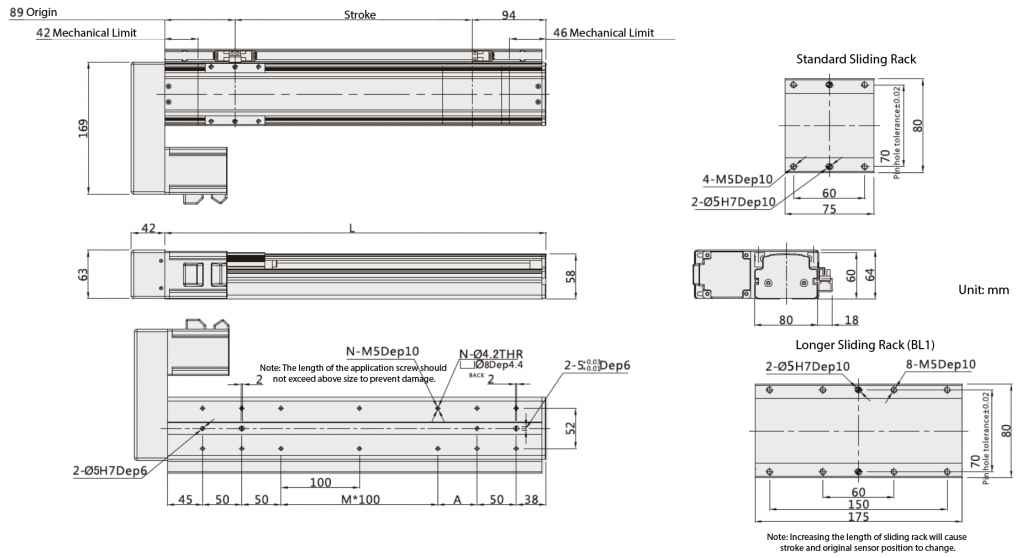


| Working Stroke | 100 | 150 | 200 | 250 | 300 | 350 | 400 | 450 | 500 | 550 | 600 | 650 | 700 | 750 | 800 | 850 | 900 | 950 | 1,000 |
|---|---|---|---|---|---|---|---|---|---|---|---|---|---|---|---|---|---|---|---|
| L | 283 | 333 | 383 | 433 | 483 | 533 | 583 | 633 | 683 | 733 | 783 | 833 | 883 | 933 | 983 | 1,033 | 1,083 | 1,133 | 1,183 |
| M | 0 | 0 | 1 | 1 | 2 | 2 | 3 | 3 | 4 | 4 | 5 | 5 | 6 | 6 | 7 | 7 | 8 | 8 | 9 |
| N | 10 | 10 | 12 | 12 | 14 | 14 | 16 | 16 | 18 | 18 | 20 | 20 | 22 | 22 | 24 | 24 | 26 | 26 | 28 |
| A | 50 | 100 | 50 | 100 | 50 | 100 | 50 | 100 | 50 | 100 | 50 | 100 | 50 | 100 | 50 | 100 | 50 | 100 | 50 |
| kg | 4 | 4.4 | 4.8 | 5.2 | 5.6 | 6 | 6.4 | 6.8 | 7.2 | 7.6 | 8 | 8.4 | 8.8 | 9.2 | 9.6 | 10 | 10.4 | 10.8 | 11.2 |

Note: does not include motor weight. Please contact orders@machmo.com for assistance if a custom stroke outside of above parameters is needed.

## BR (Right Side):

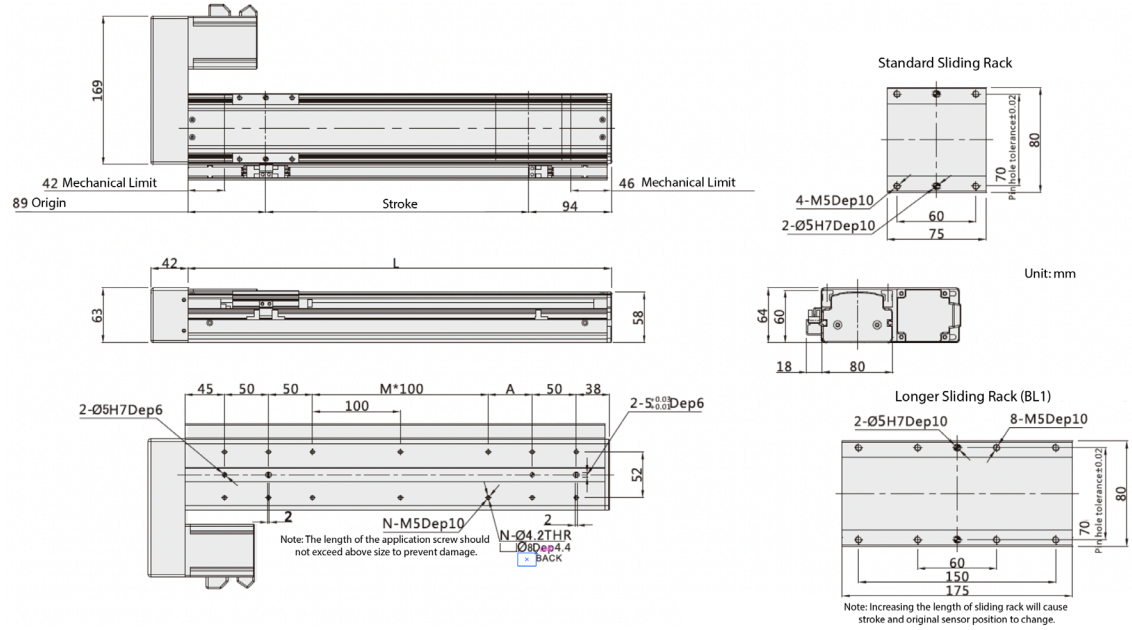


| Working Stroke | 100 | 150 | 200 | 250 | 300 | 350 | 400 | 450 | 500 | 550 | 600 | 650 | 700 | 750 | 800 | 850 | 900 | 950 | 1,000 |
|---|---|---|---|---|---|---|---|---|---|---|---|---|---|---|---|---|---|---|---|
| L | 283 | 333 | 383 | 433 | 483 | 533 | 583 | 633 | 683 | 733 | 783 | 833 | 883 | 933 | 983 | 1,033 | 1,083 | 1,133 | 1,183 |
| M | 0 | 0 | 1 | 1 | 2 | 2 | 3 | 3 | 4 | 4 | 5 | 5 | 6 | 6 | 7 | 7 | 8 | 8 | 9 |
| N | 10 | 10 | 12 | 12 | 14 | 14 | 16 | 16 | 18 | 18 | 20 | 20 | 22 | 22 | 24 | 24 | 26 | 26 | 28 |
| A | 50 | 100 | 50 | 100 | 50 | 100 | 50 | 100 | 50 | 100 | 50 | 100 | 50 | 100 | 50 | 100 | 50 | 100 | 50 |
| kg | 4 | 4.4 | 4.8 | 5.2 | 5.6 | 6 | 6.4 | 6.8 | 7.2 | 7.6 | 8 | 8.4 | 8.8 | 9.2 | 9.6 | 10 | 10.4 | 10.8 | 11.2 |

Note: does not include motor weight. Please contact orders@machmo.com for assistance if a custom stroke outside of above parameters is needed.

Mach Motion Products

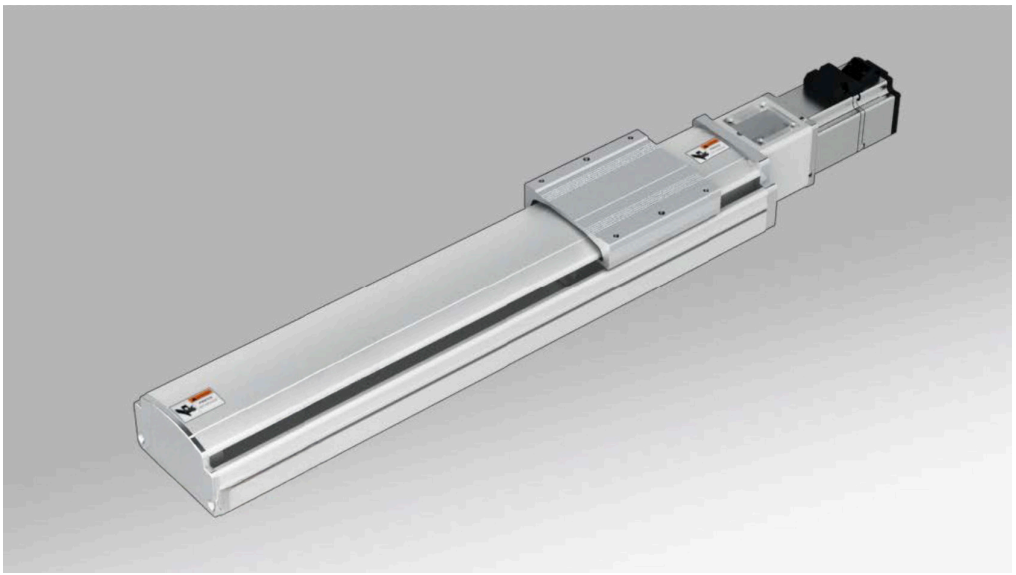

## Motor Mount Location

BA (Basic)

BC (Inline)

BL (Left Side)

BR (Right Side)

M (Built In)

## Model Selection Guide

**MF10 - L16 - P - S100 - BC - ZP10B - C 3 P**

| Base Style | |
|---|---|
| M | M Series |
| F | Semi-Closed Frame |
| 10 | Body Width 100mm |

| Ball Screw Lead | |
|---|---|
| L5 | 5mm |
| L10 | 10mm |
| L16 | 16mm |
| L20 | 20mm |

| Accuracy Class | |
|---|---|
| P | C5 Precision |
| C | C7 Accuracy |

| Stroke (mm) |
|---|
| 100-1,000mm |

| Motor Connection | |
|---|---|
| BA | Basic |
| BC | Inline |
| BR | Right Side |
| BL | Left Side |
| M | Built In |

| Motor Type | | Motor Power | |
|---|---|---|---|
| M | Mach Motion | 10 | 100W |
| Z | Client's Motor | 20 | 200W |
| Brake | | 40 | 400W |
| B | With Brake | 57 | 57-Ø8 |
| None (No B) | No Brake | | 57-Ø6.35 |

| Sensor Switch | |
|---|---|
| 2 | 2 Pcs |
| 3 | 3 Pcs |

| Sensor Type | |
|---|---|
| P | PNP |
| None (No P) | NPN |

| Original Sensor Position | |
|---|---|
| External | |
| C | Motor Side |
| D | Opposite Motor Side |
| E | No Sensor |

## Technical Specifications

| | | | | | |
|---|---|---|---|---|---|
| Motor Power (W) | | 100W / 200W / 400W | | | |
| Ball Screw Diameter (mm) | | C7 | | 16 | |
| | | C5 | | 16 | |
| Repeatability (mm) | | C7 | | ± 0.01 | |
| | | C5 | | ± 0.006 | |
| Ball Screw Lead (mm) | | 5 | 10 | 16 | 20 |
| Max. Speed (mm/sec)<br>3000 Motor Speed (rpm/min) | | 250 | 500 | 800 | 1,000 |
| Maximum Payload (kg) | Horizontal | 50/65/65 | 30/39/45 | 22/28/33 | 18/20/23 |
| | Vertical | 12/15/18 | 8/10/12 | 5/6/7 | 3/4/5 |
| Rated Thrust (N) | | 330/683/1,388 | 165/341/694 | 100/213/433 | 85/174/347 |
| Linear Guide (mm) | | 15 x 12.5 -2 | | | |
| Coupling (mm)<br>Motor Side x Ball Screw Side | | 8 x 10 | 11 x 10 | 14 x 10 | 14 x 10 |
| Motor Output | | 100W | 200W | | 400W |
| Home Sensor - Outside | | EE-SX672(NPN) | | EE-SX672P(PNP) | |
| Home Sensor - Outside Guide | | EE-SX674(NPN) | | EE-SX674P(PNP) | |

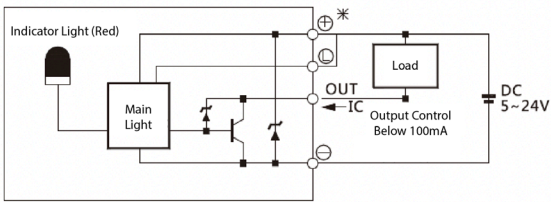


**Notes:**

**1. Motor acceleration and deceleration value is set to 0.2 seconds.**

**2. Repeatability is within 300mm stroke - longer stroke will result in lower value.**

**3. If stroke of 700mm+ leads to swing of ball screw, please reduce speed by 15%.**

## Maximum Static Torque

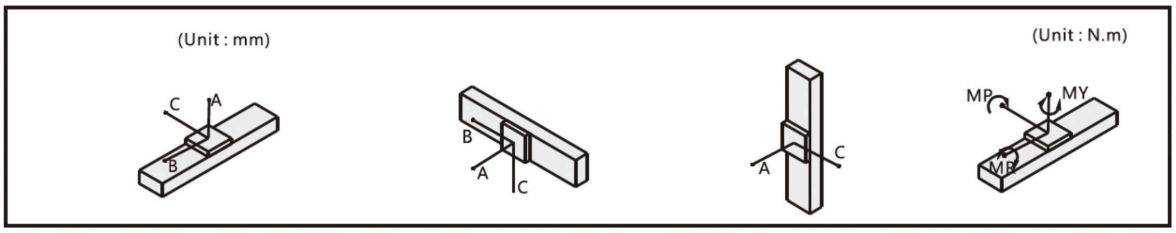


| Horizontal Installation | | A | B | C |
|---|---|---|---|---|
| Lead 5 | 30kg | 424 | 24 | 25 |
| | 50kg | 0 | 0 | 0 |
| | - | - | - | - |
| Lead 10 | 15kg | 394 | 76 | 79 |
| | 25kg | 184 | 22 | 25 |
| | 30kg | 111 | - | - |
| Lead 16 | 5kg | 937 | 282 | 259 |
| | 10kg | 487 | 121 | 116 |
| | 15kg | 236 | 40 | 44 |

| Wall Installation | | A | B | C |
|---|---|---|---|---|
| Lead 5 | 10kg | 105 | 50 | 1,400 |
| | 20kg | 22 | 124 | 538 |
| | 30kg | 0 | 0 | 0 |
| Lead 10 | 10kg | 100 | 50 | 545 |
| | 20kg | 20 | 0 | 221 |
| | 30kg | 0 | 0 | 0 |
| Lead 16 | 5kg | 116 | 58 | 605 |
| | 10kg | 24 | 0 | 253 |
| | 15kg | 0 | 0 | 0 |

| Vertical Installation | | A | C |
|---|---|---|---|
| Lead 5 | 5kg | 100 | 145 |
| | 10kg | 50 | 90 |
| | 12kg | 23 | 63 |
| Lead 10 | 4kg | 335 | 375 |
| | 6kg | 140 | 180 |
| | 8kg | 100 | 140 |
| Lead 16 | 1kg | 372 | 418 |
| | 2kg | 116 | 202 |
| | 3kg | 113 | 159 |

| Max. Static Torque | | |
|---|---|---|
| MY | MP | MR |
| 131 | 131 | 115 |

## BA (Basic):

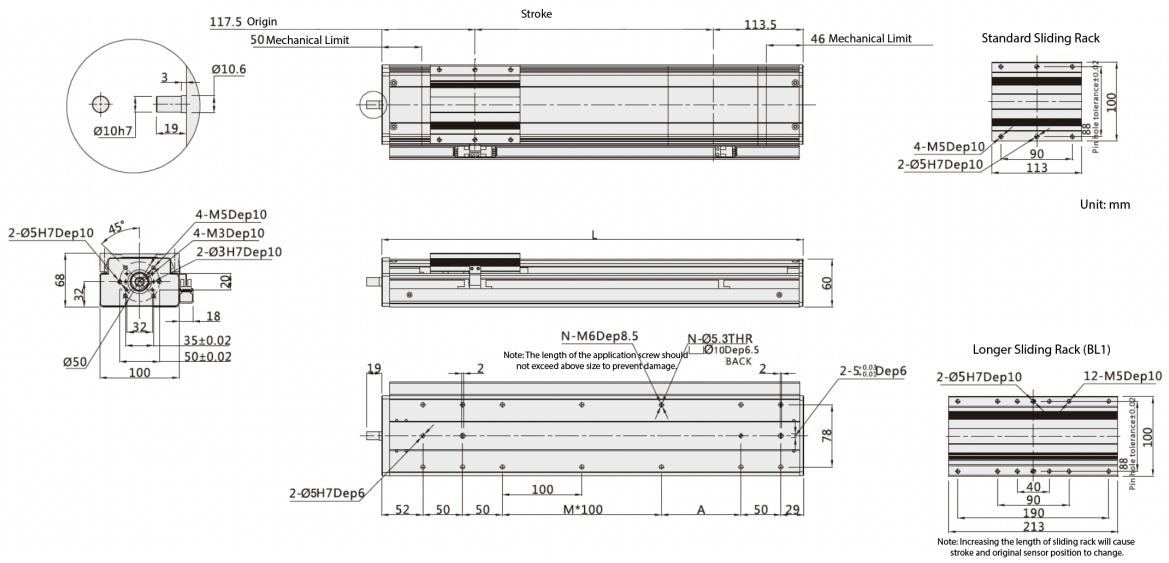


| Working Stroke | 100 | 150 | 200 | 250 | 300 | 350 | 400 | 450 | 500 | 550 | 600 | 650 | 700 | 750 | 800 | 850 | 900 | 950 | 1,000 |
|---|---|---|---|---|---|---|---|---|---|---|---|---|---|---|---|---|---|---|---|
| L | 331 | 381 | 431 | 481 | 531 | 581 | 631 | 681 | 731 | 781 | 831 | 881 | 931 | 981 | 1,031 | 1,081 | 1,131 | 1,181 | 1,231 |
| M | 0 | 1 | 1 | 2 | 2 | 3 | 3 | 4 | 4 | 5 | 5 | 6 | 6 | 7 | 7 | 8 | 8 | 9 | 9 |
| N | 10 | 12 | 12 | 14 | 14 | 16 | 16 | 18 | 18 | 20 | 20 | 22 | 22 | 24 | 24 | 26 | 26 | 28 | 28 |
| A | 100 | 50 | 100 | 50 | 100 | 50 | 100 | 50 | 100 | 50 | 100 | 50 | 100 | 50 | 100 | 50 | 100 | 50 | 100 |
| kg | 4.1 | 4.5 | 4.9 | 5.3 | 5.7 | 6.1 | 6.5 | 6.9 | 7.3 | 7.7 | 8.1 | 8.5 | 8.9 | 9.3 | 9.7 | 10.1 | 10.5 | 10.9 | 11.3 |

Note: does not include motor weight. Please contact orders@machmo.com for assistance if a custom stroke outside of above parameters is needed.

## BC (Inline):

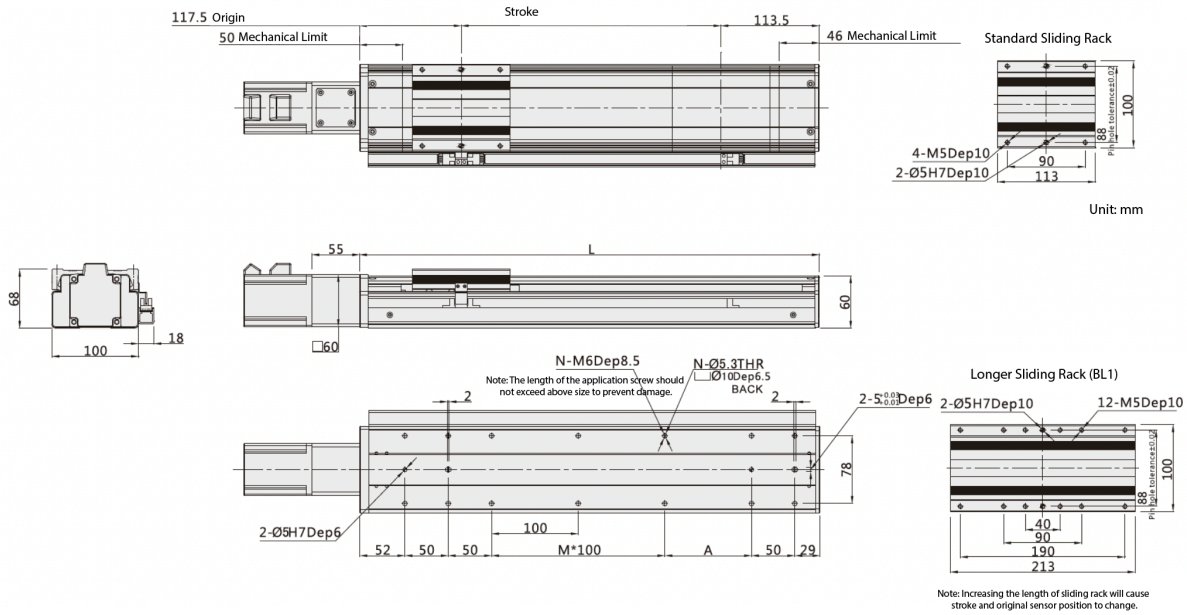


| Working Stroke | 100 | 150 | 200 | 250 | 300 | 350 | 400 | 450 | 500 | 550 | 600 | 650 | 700 | 750 | 800 | 850 | 900 | 950 | 1,000 |
|---|---|---|---|---|---|---|---|---|---|---|---|---|---|---|---|---|---|---|---|
| L | 331 | 381 | 431 | 481 | 531 | 581 | 631 | 681 | 731 | 781 | 831 | 881 | 931 | 981 | 1,031 | 1,081 | 1,131 | 1,181 | 1,231 |
| M | 0 | 1 | 1 | 2 | 2 | 3 | 3 | 4 | 4 | 5 | 5 | 6 | 6 | 7 | 7 | 8 | 8 | 9 | 9 |
| N | 10 | 12 | 12 | 14 | 14 | 16 | 16 | 18 | 18 | 20 | 20 | 22 | 22 | 24 | 24 | 26 | 26 | 28 | 28 |
| A | 100 | 50 | 100 | 50 | 100 | 50 | 100 | 50 | 100 | 50 | 100 | 50 | 100 | 50 | 100 | 50 | 100 | 50 | 100 |
| kg | 4.4 | 4.8 | 5.2 | 5.6 | 6 | 6.4 | 6.8 | 7.2 | 7.6 | 8 | 8.4 | 8.8 | 9.2 | 9.6 | 10 | 10.4 | 10.8 | 11.2 | 11.6 |

Note: does not include motor weight. Please contact orders@machmo.com for assistance if a custom stroke outside of above parameters is needed.

## BL (Left Side):

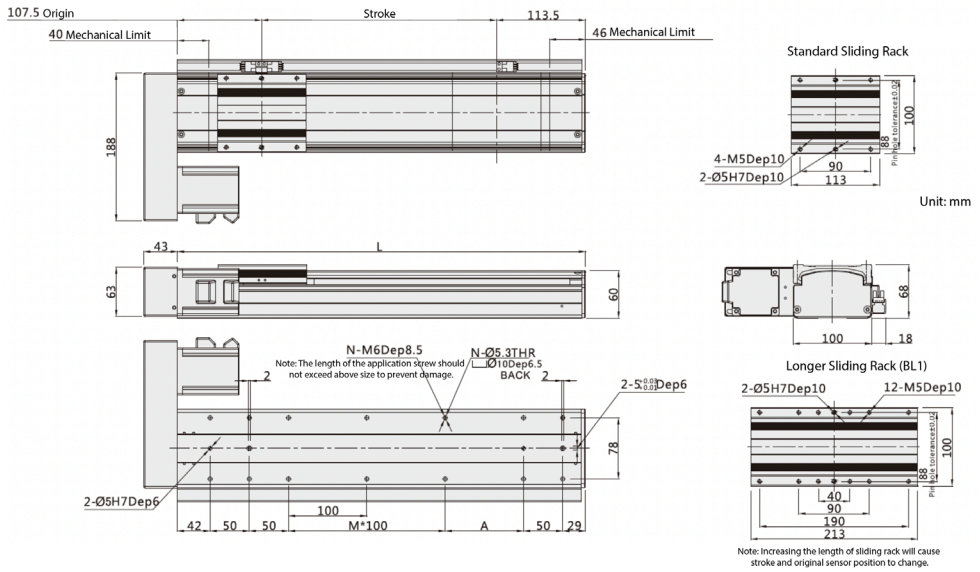


| Working Stroke | 100 | 150 | 200 | 250 | 300 | 350 | 400 | 450 | 500 | 550 | 600 | 650 | 700 | 750 | 800 | 850 | 900 | 950 | 1,000 |
|---|---|---|---|---|---|---|---|---|---|---|---|---|---|---|---|---|---|---|---|
| L | 321 | 371 | 421 | 471 | 521 | 571 | 621 | 671 | 721 | 771 | 821 | 871 | 921 | 971 | 1,021 | 1,071 | 1,121 | 1,171 | 1,221 |
| M | 0 | 1 | 1 | 2 | 2 | 3 | 3 | 4 | 4 | 5 | 5 | 6 | 6 | 7 | 7 | 8 | 8 | 9 | 9 |
| N | 10 | 12 | 12 | 14 | 14 | 16 | 16 | 18 | 18 | 20 | 20 | 22 | 22 | 24 | 24 | 26 | 26 | 28 | 28 |
| A | 100 | 50 | 100 | 50 | 100 | 50 | 100 | 50 | 100 | 50 | 100 | 50 | 100 | 50 | 100 | 50 | 100 | 50 | 100 |
| kg | 5 | 5.4 | 5.8 | 6.2 | 6.6 | 7 | 7.4 | 7.8 | 8.2 | 8.6 | 9 | 9.4 | 9.8 | 10.2 | 10.6 | 11 | 11.4 | 11.8 | 12.2 |

Note: does not include motor weight. Please contact orders@machmo.com for assistance if a custom stroke outside of above parameters is needed.

## BR (Right Side):

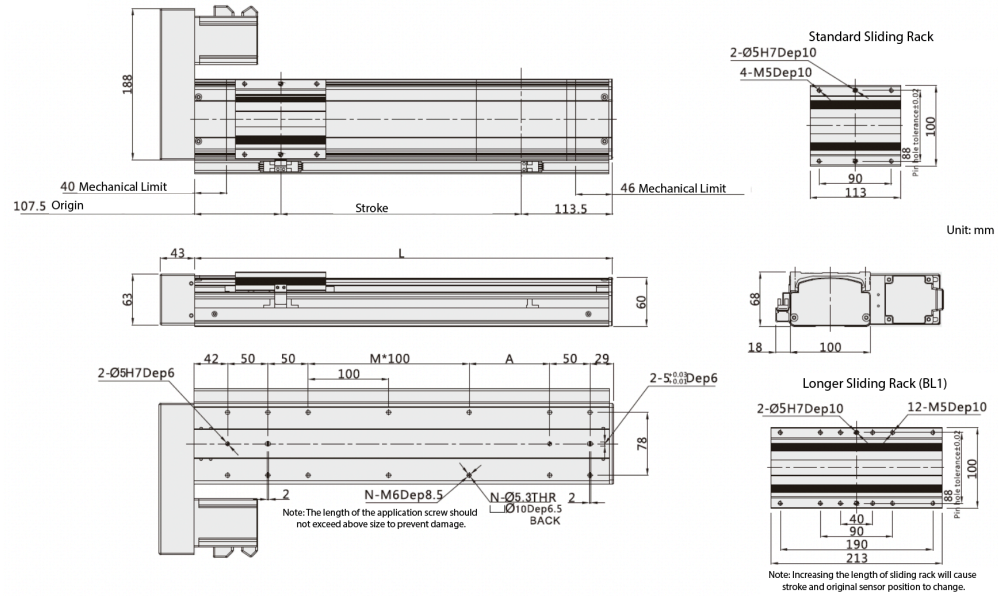


| Working Stroke | 100 | 150 | 200 | 250 | 300 | 350 | 400 | 450 | 500 | 550 | 600 | 650 | 700 | 750 | 800 | 850 | 900 | 950 | 1,000 |
|---|---|---|---|---|---|---|---|---|---|---|---|---|---|---|---|---|---|---|---|
| L | 321 | 371 | 421 | 471 | 521 | 571 | 621 | 671 | 721 | 771 | 821 | 871 | 921 | 971 | 1,021 | 1,071 | 1,121 | 1,171 | 1,221 |
| M | 0 | 1 | 1 | 2 | 2 | 3 | 3 | 4 | 4 | 5 | 5 | 6 | 6 | 7 | 7 | 8 | 8 | 9 | 9 |
| N | 10 | 12 | 12 | 14 | 14 | 16 | 16 | 18 | 18 | 20 | 20 | 22 | 22 | 24 | 24 | 26 | 26 | 28 | 28 |
| A | 100 | 50 | 100 | 50 | 100 | 50 | 100 | 50 | 100 | 50 | 100 | 50 | 100 | 50 | 100 | 50 | 100 | 50 | 100 |
| kg | 5 | 5.4 | 5.8 | 6.2 | 6.6 | 7 | 7.4 | 7.8 | 8.2 | 8.6 | 9 | 9.4 | 9.8 | 10.2 | 10.6 | 11 | 11.4 | 11.8 | 12.2 |

Note: does not include motor weight. Please contact orders@machmo.com for assistance if a custom stroke outside of above parameters is needed.

## M (Built In):

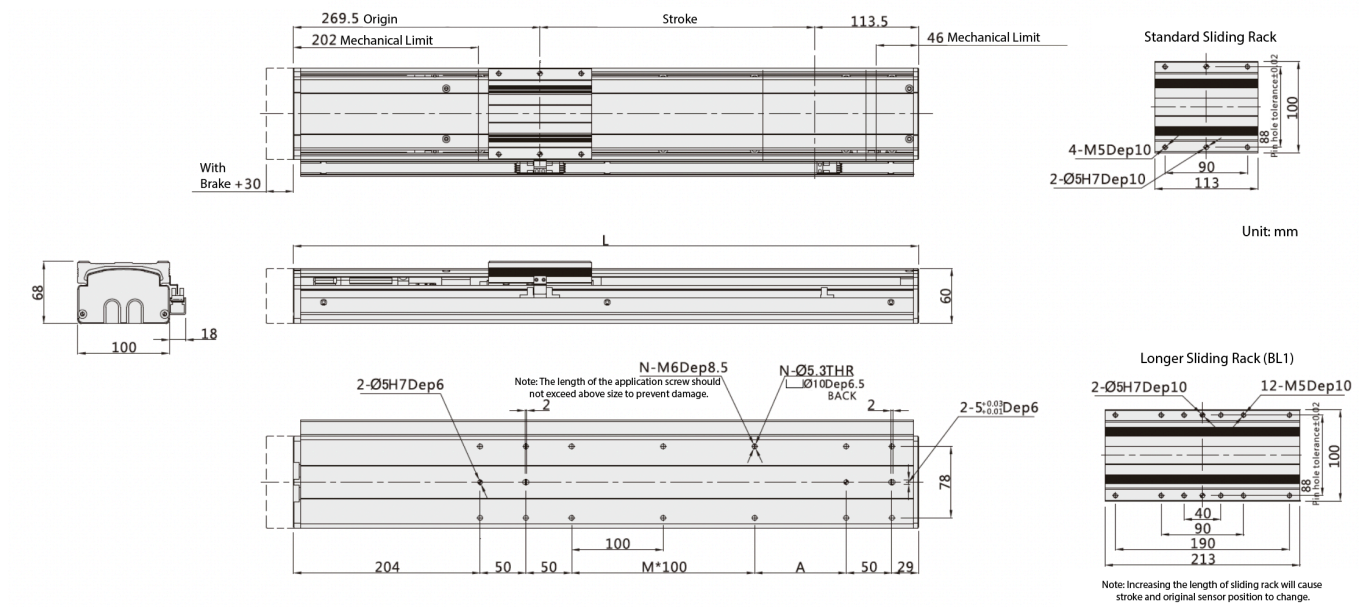


| Working Stroke | 100 | 150 | 200 | 250 | 300 | 350 | 400 | 450 | 500 | 550 | 600 | 650 | 700 | 750 | 800 | 850 | 900 | 950 | 1,000 |
|---|---|---|---|---|---|---|---|---|---|---|---|---|---|---|---|---|---|---|---|
| L | 483 | 533 | 583 | 633 | 683 | 733 | 783 | 833 | 883 | 933 | 983 | 1,033 | 1,083 | 1,133 | 1,183 | 1,233 | 1,283 | 1,333 | 1,383 |
| M | 0 | 1 | 1 | 2 | 2 | 3 | 3 | 4 | 4 | 5 | 5 | 6 | 6 | 7 | 7 | 8 | 8 | 9 | 9 |
| N | 10 | 12 | 12 | 14 | 14 | 16 | 16 | 18 | 18 | 20 | 20 | 22 | 22 | 24 | 24 | 26 | 26 | 28 | 28 |
| A | 100 | 50 | 100 | 50 | 100 | 50 | 100 | 50 | 100 | 50 | 100 | 50 | 100 | 50 | 100 | 50 | 100 | 50 | 100 |
| kg | 4.9 | 5.3 | 5.7 | 6.1 | 6.5 | 6.9 | 7.3 | 7.7 | 8.1 | 8.5 | 8.9 | 9.3 | 9.7 | 10.1 | 10.5 | 10.9 | 11.3 | 11.7 | 12.1 |

Note: does not include motor weight. Please contact orders@machmo.com for assistance if a custom stroke outside of above parameters is needed.

Mach Motion Products

## Motor Mount Location

BA (Basic)

BC (Inline)

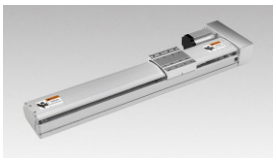

BL (Left Side)

BR (Right Side)

M (Built In)

## Model Selection Guide

**MF12 - L20 - P - S100 - BC - ZP20B - C 3 P**

| Base Style | |
|---|---|
| M | M Series |
| F | Semi-Closed Frame |
| 12 | Body Width 120mm |

| Ball Screw Lead | |
|---|---|
| L5 | 5mm |
| L10 | 10mm |
| L16 | 16mm |
| L20 | 20mm |

| Accuracy Class | |
|---|---|
| P | C5 Precision |
| C | C7 Accuracy |

| Stroke (mm) |
|---|
| 100-1,200mm |

| Motor Connection | |
|---|---|
| BA | Basic |
| BC | Inline |
| BR | Right Side |
| BL | Left Side |
| M | Built In |

| Motor Type | | Motor Power | |
|---|---|---|---|
| M | Mach Motion | 20 | 200W |
| Z | Client's Motor | 40 | 400W |
| Brake | | 57 | 57-Ø8 |
| B | With Brake | | 57-Ø6.35 |
| None (No B) | No Brake | - | |

| Sensor Switch | |
|---|---|
| 2 | 2 Pcs |
| 3 | 3 Pcs |

| Sensor Type | |
|---|---|
| P | PNP |
| None (No P) | NPN |

| Original Sensor Position | |
|---|---|
| External | |
| C | Motor Side |
| D | Opposite Motor Side |
| E | No Sensor |

## Technical Specifications

| | | | | | |
|---|---|---|---|---|---|
| Motor Power (W) | | 200W / 400W | | | |
| Ball Screw Diameter (mm) | | C7 | | 16 | |
| | | C5 | | 16 | |
| Repeatability (mm) | | C7 | | ± 0.01 | |
| | | C5 | | ± 0.006 | |
| Ball Screw Lead (mm) | | 5 | 10 | 16 | 20 |
| Max. Speed (mm/sec) 3000 Motor Speed (rpm/min) | | 250 | 500 | 800 | 1,000 |
| Maximum Payload (kg) | Horizontal | 70/84 | 47/56 | 30/36 | 24/28 |
| | Vertical | 17/20 | 12/17 | 6/7 | 4/5 |
| Rated Thrust (N) | | 683/1,388 | 341/694 | 213/433 | 174/347 |
| Linear Guide (mm) | | 15 x 12.5 - 2 | | | |
| Coupling (mm) Motor Side x Ball Screw Side | | 11 x 10 | 14 x 10 | | |
| Motor Output | | 200W | | 400W | |
| Home Sensor - Outside | | EE-SX672(NPN) | | EE-SX672P(PNP) | |
| Home Sensor - Outside Guide | | EE-SX674(NPN) | | EE-SX674P(PNP) | |

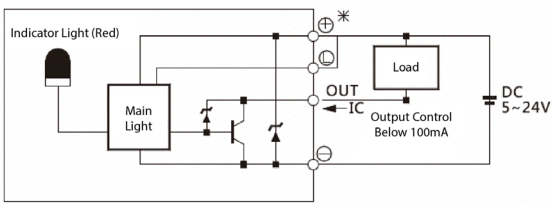


**Notes:**

**1. Motor acceleration and deceleration value is set to 0.2 seconds.**

**2. Repeatability is within 300mm stroke - longer stroke will result in lower value.**

**3. If stroke of 600mm+ leads to swing of ball screw, please reduce speed by 15%.**

## Maximum Static Torque

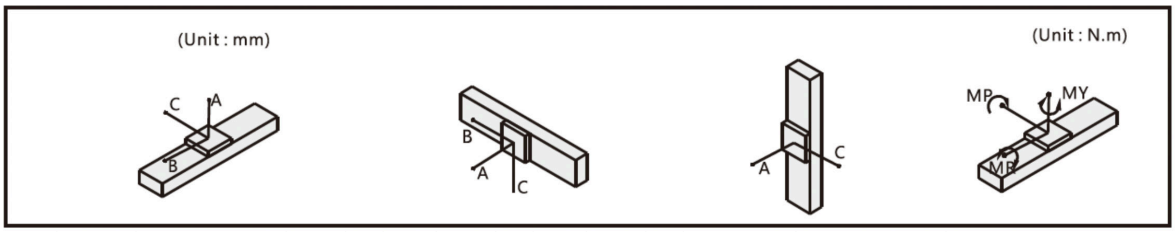


| Horizontal Installation | | A | B | C |
|---|---|---|---|---|
| Lead 5 | 40kg | 2,448 | 316 | 322 |
| | 55kg | 2,197 | 247 | 257 |
| | 70kg | 2,005 | 207 | 219 |
| Lead 10 | 25kg | 1,958 | 370 | 490 |
| | 35kg | 1,660 | 370 | 330 |
| | 47kg | 1,725 | 247 | 243 |
| Lead 16 | 10kg | 1,800 | 1,400 | 311 |
| | 20kg | 1,100 | 1,100 | 139 |
| | 30kg | 1,047 | 445 | 324 |

| Wall Installation | | A | B | C |
|---|---|---|---|---|
| Lead 5 | 40kg | 204 | 112 | 1,394 |
| | 55kg | 130 | 57 | 1,115 |
| | 70kg | 85 | 24 | 895 |
| Lead 10 | 25kg | 414 | 333 | 1,277 |
| | 35kg | 235 | 157 | 929 |
| | 47kg | 129 | 57 | 751 |
| Lead 16 | 10kg | 461 | 372 | 1,410 |
| | 20kg | 264 | 178 | 1,027 |
| | 30kg | 148 | 69 | 832 |

| Vertical Installation | | A | C |
|---|---|---|---|
| Lead 5 | 5kg | 762 | 614 |
| | 10kg | 607 | 489 |
| | 12kg | 498 | 493 |
| Lead 10 | 4kg | 1,365 | 1,101 |
| | 6kg | 901 | 727 |
| | 8kg | 674 | 543 |
| Lead 16 | 1kg | 1,087 | 1,217 |
| | 2kg | 997 | 805 |
| | 6kg | 747 | 603 |

| Max. Static Torque | | |
|---|---|---|
| MY | MP | MR |
| 174 | 175 | 153 |

## BA (Basic):

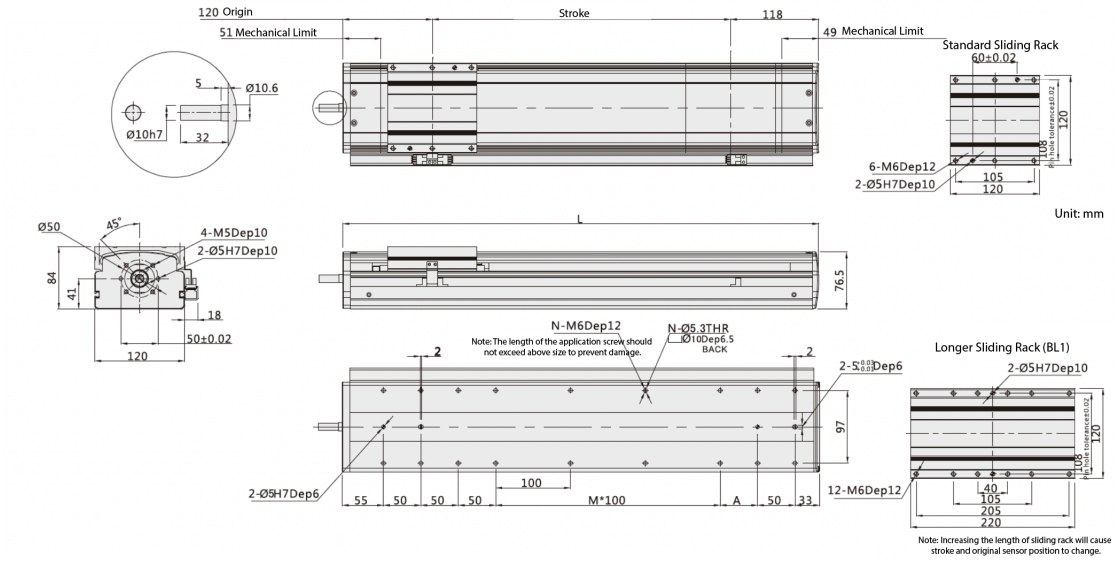


| Working Stroke | 100 | 150 | 200 | 250 | 300 | 350 | 400 | 450 | 500 | 550 | 600 | 650 | 700 | 750 | 800 | 850 | 900 | 950 | 1,000 | 1,050 | 1,100 | 1,150 | 1,200 |
|---|---|---|---|---|---|---|---|---|---|---|---|---|---|---|---|---|---|---|---|---|---|---|---|
| L | 338 | 388 | 438 | 488 | 538 | 588 | 638 | 688 | 738 | 788 | 838 | 888 | 938 | 988 | 1,038 | 1,088 | 1,138 | 1,188 | 1,238 | 1,288 | 1,338 | 1,388 | 1,438 |
| M | 0 | 0 | 1 | 1 | 2 | 2 | 3 | 3 | 4 | 4 | 5 | 5 | 6 | 6 | 7 | 7 | 8 | 8 | 9 | 9 | 10 | 10 | 11 |
| N | 12 | 12 | 14 | 14 | 16 | 16 | 18 | 18 | 20 | 20 | 22 | 22 | 24 | 24 | 26 | 26 | 28 | 28 | 30 | 30 | 32 | 32 | 34 |
| A | 50 | 100 | 50 | 100 | 50 | 100 | 50 | 100 | 50 | 100 | 50 | 100 | 50 | 100 | 50 | 100 | 50 | 100 | 50 | 100 | 50 | 100 | 50 |
| kg | 5.9 | 6.4 | 6.9 | 7.4 | 7.9 | 8.4 | 8.9 | 9.4 | 9.9 | 10.4 | 10.9 | 11.4 | 11.9 | 12.4 | 12.9 | 13.4 | 13.9 | 14.4 | 14.9 | 15.4 | 15.9 | 16.4 | 16.9 |

Note: does not include motor weight. Please contact orders@machmo.com for assistance if a custom stroke outside of above parameters is needed.

## BC (Inline):

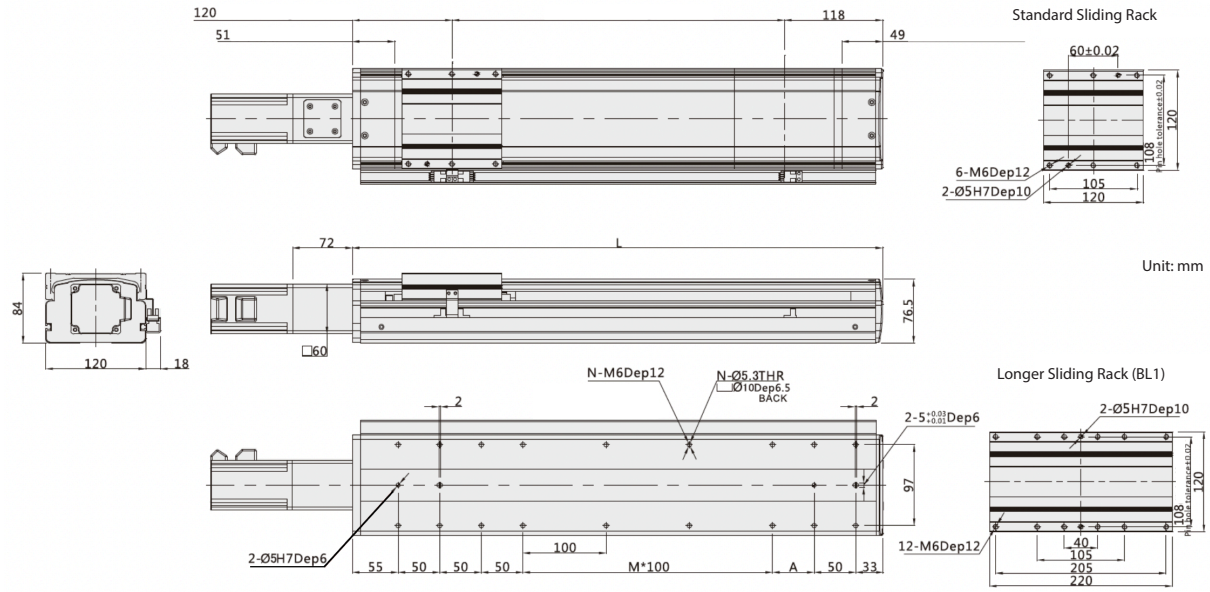


| Working Stroke | 100 | 150 | 200 | 250 | 300 | 350 | 400 | 450 | 500 | 550 | 600 | 650 | 700 | 750 | 800 | 850 | 900 | 950 | 1,000 | 1,050 | 1,100 | 1,150 | 1,200 |
|---|---|---|---|---|---|---|---|---|---|---|---|---|---|---|---|---|---|---|---|---|---|---|---|
| L | 338 | 388 | 438 | 488 | 538 | 588 | 638 | 688 | 738 | 788 | 838 | 888 | 938 | 988 | 1,038 | 1,088 | 1,138 | 1,188 | 1,238 | 1,288 | 1,338 | 1,388 | 1,438 |
| M | 0 | 0 | 1 | 1 | 2 | 2 | 3 | 3 | 4 | 4 | 5 | 5 | 6 | 6 | 7 | 7 | 8 | 8 | 9 | 9 | 10 | 10 | 11 |
| N | 12 | 12 | 14 | 14 | 16 | 16 | 18 | 18 | 20 | 20 | 22 | 22 | 24 | 24 | 26 | 26 | 28 | 28 | 30 | 30 | 32 | 32 | 34 |
| A | 50 | 100 | 50 | 100 | 50 | 100 | 50 | 100 | 50 | 100 | 50 | 100 | 50 | 100 | 50 | 100 | 50 | 100 | 50 | 100 | 50 | 100 | 50 |
| kg | 6.2 | 6.7 | 7.2 | 7.7 | 8.2 | 8.7 | 9.2 | 9.7 | 10.2 | 10.4 | 11.2 | 11.7 | 12.2 | 12.7 | 13.2 | 13.7 | 14.2 | 14.7 | 15.2 | 15.7 | 16.2 | 16.7 | 17.2 |

Note: does not include motor weight. Please contact orders@machmo.com for assistance if a custom stroke outside of above parameters is needed.

## BL (Left Side):

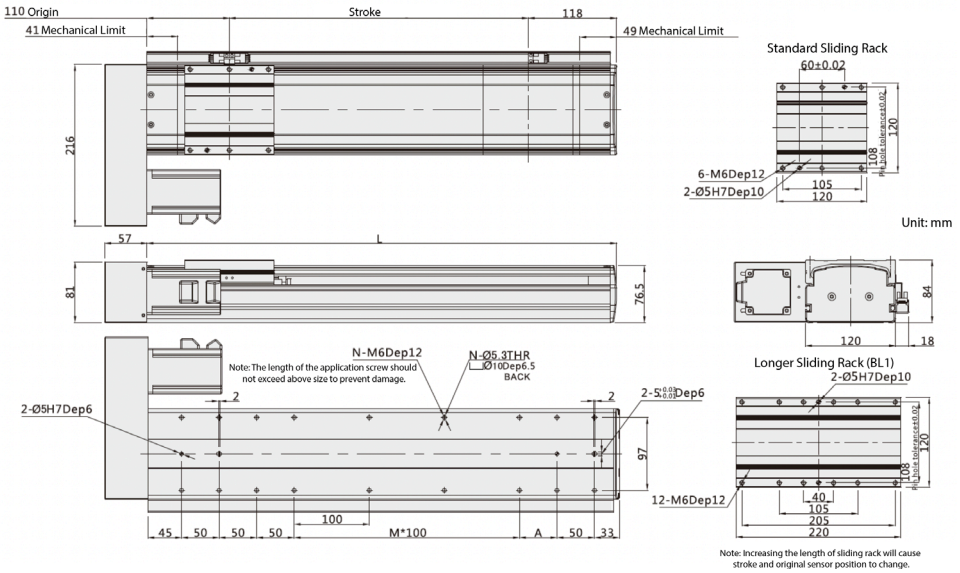


| Working Stroke | 100 | 150 | 200 | 250 | 300 | 350 | 400 | 450 | 500 | 550 | 600 | 650 | 700 | 750 | 800 | 850 | 900 | 950 | 1,000 | 1,050 | 1,100 | 1,150 | 1,200 |
|---|---|---|---|---|---|---|---|---|---|---|---|---|---|---|---|---|---|---|---|---|---|---|---|
| L | 328 | 378 | 428 | 478 | 528 | 578 | 628 | 678 | 728 | 778 | 828 | 878 | 928 | 978 | 1,028 | 1,078 | 1,128 | 1,178 | 1,228 | 1,278 | 1,328 | 1,378 | 1,428 |
| M | 0 | 0 | 1 | 1 | 2 | 2 | 3 | 3 | 4 | 4 | 5 | 5 | 6 | 6 | 7 | 7 | 8 | 8 | 9 | 9 | 10 | 10 | 11 |
| N | 12 | 12 | 14 | 14 | 16 | 16 | 18 | 18 | 20 | 20 | 22 | 22 | 24 | 24 | 26 | 26 | 28 | 28 | 30 | 30 | 32 | 32 | 34 |
| A | 50 | 100 | 50 | 100 | 50 | 100 | 50 | 100 | 50 | 100 | 50 | 100 | 50 | 100 | 50 | 100 | 50 | 100 | 50 | 100 | 50 | 100 | 50 |
| kg | 7.3 | 7.8 | 8.3 | 8.8 | 9.3 | 9.8 | 10.3 | 10.8 | 11.3 | 11.8 | 12.3 | 12.8 | 13.3 | 13.8 | 14.3 | 14.8 | 15.3 | 15.8 | 16.3 | 16.8 | 17.3 | 17.8 | 18.3 |

Note: does not include motor weight. Please contact orders@machmo.com for assistance if a custom stroke outside of above parameters is needed.

## BR (Right Side):

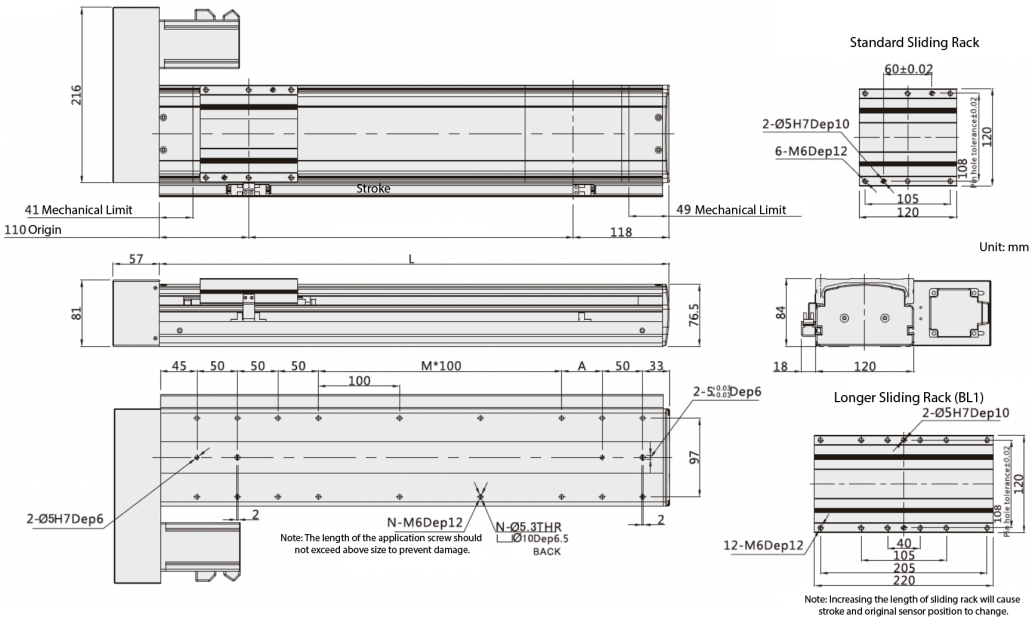


| Working Stroke | 100 | 150 | 200 | 250 | 300 | 350 | 400 | 450 | 500 | 550 | 600 | 650 | 700 | 750 | 800 | 850 | 900 | 950 | 1,000 | 1,050 | 1,100 | 1,150 | 1,200 |
|---|---|---|---|---|---|---|---|---|---|---|---|---|---|---|---|---|---|---|---|---|---|---|---|
| L | 328 | 378 | 428 | 478 | 528 | 578 | 628 | 678 | 728 | 778 | 828 | 878 | 928 | 978 | 1,028 | 1,078 | 1,128 | 1,178 | 1,228 | 1,278 | 1,328 | 1,378 | 1,428 |
| M | 0 | 0 | 1 | 1 | 2 | 2 | 3 | 3 | 4 | 4 | 5 | 5 | 6 | 6 | 7 | 7 | 8 | 8 | 9 | 9 | 10 | 10 | 11 |
| N | 12 | 12 | 14 | 14 | 16 | 16 | 18 | 18 | 20 | 20 | 22 | 22 | 24 | 24 | 26 | 26 | 28 | 28 | 30 | 30 | 32 | 32 | 34 |
| A | 50 | 100 | 50 | 100 | 50 | 100 | 50 | 100 | 50 | 100 | 50 | 100 | 50 | 100 | 50 | 100 | 50 | 100 | 50 | 100 | 50 | 100 | 50 |
| kg | 7.3 | 7.8 | 8.3 | 8.8 | 9.3 | 9.8 | 10.3 | 10.8 | 11.3 | 11.8 | 12.3 | 12.8 | 13.3 | 13.8 | 14.3 | 14.8 | 15.3 | 15.8 | 16.3 | 16.8 | 17.3 | 17.8 | 18.3 |

Note: does not include motor weight. Please contact orders@machmo.com for assistance if a custom stroke outside of above parameters is needed.

## M (Built In):

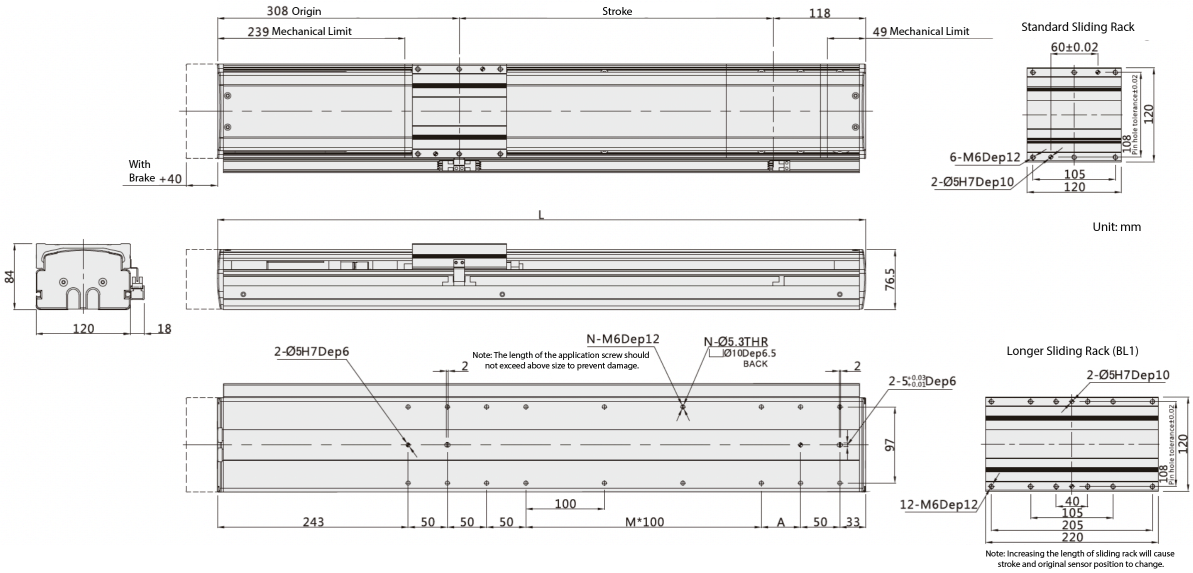


| Working Stroke | 100 | 150 | 200 | 250 | 300 | 350 | 400 | 450 | 500 | 550 | 600 | 650 | 700 | 750 | 800 | 850 | 900 | 950 | 1,000 | 1,050 | 1,100 | 1,150 | 1,200 |
|---|---|---|---|---|---|---|---|---|---|---|---|---|---|---|---|---|---|---|---|---|---|---|---|
| L | 526 | 576 | 626 | 676 | 726 | 776 | 826 | 876 | 926 | 976 | 1,026 | 1,076 | 1,126 | 1,176 | 1,226 | 1,276 | 1,326 | 1,376 | 1,426 | 1,476 | 1,526 | 1,576 | 1,626 |
| M | 0 | 0 | 1 | 1 | 2 | 2 | 3 | 3 | 4 | 4 | 5 | 5 | 6 | 6 | 7 | 7 | 8 | 8 | 9 | 9 | 10 | 10 | 11 |
| N | 12 | 12 | 14 | 14 | 16 | 16 | 18 | 18 | 20 | 20 | 22 | 22 | 24 | 24 | 26 | 26 | 28 | 28 | 30 | 30 | 32 | 32 | 34 |
| A | 50 | 100 | 50 | 100 | 50 | 100 | 50 | 100 | 50 | 100 | 50 | 100 | 50 | 100 | 50 | 100 | 50 | 100 | 50 | 100 | 50 | 100 | 50 |
| kg | 6.9 | 7.4 | 7.9 | 8.4 | 8.9 | 9.4 | 9.9 | 10.4 | 10.9 | 11.4 | 11.9 | 12.4 | 12.9 | 13.4 | 13.9 | 14.4 | 14.9 | 15.4 | 15.9 | 16.4 | 16.9 | 17.4 | 17.9 |

Note: does not include motor weight. Please contact orders@machmo.com for assistance if a custom stroke outside of above parameters is needed.

Mach Motion Products

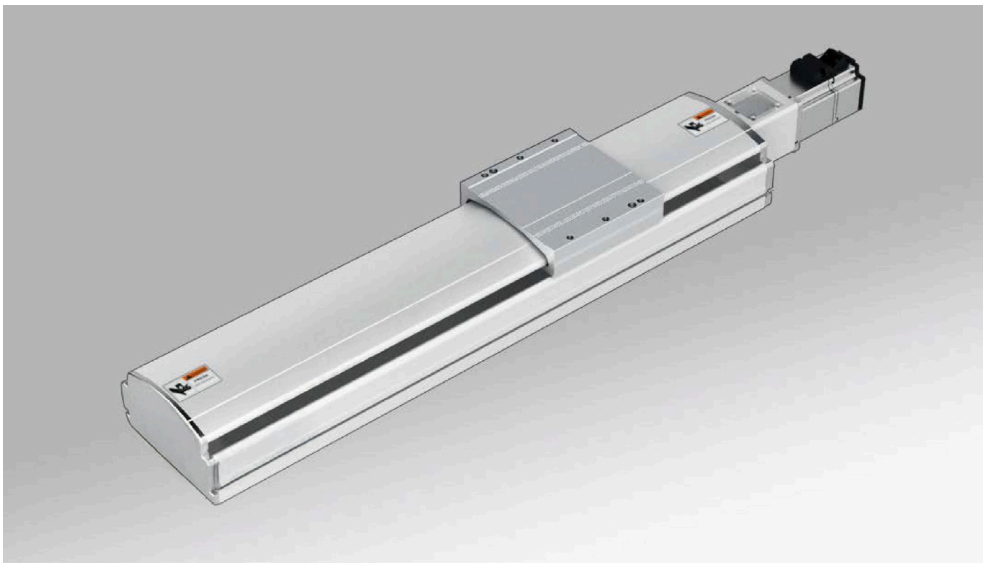

## Motor Mount Location

BA (Basic)

BC (Inline)

BL (Left Side)

BR (Right Side)

M (Built In)

## Model Selection Guide

**MF14 - L20 - P - S100 - BC - ZP40B - C 3 P**

| Base Style | |
|---|---|
| M | M Series |
| F | Semi-Closed Frame |
| 14 | Body Width 140mm |

| Ball Screw Lead | |
|---|---|
| L5 | 5mm |
| L10 | 10mm |
| L20 | 20mm |
| L40 | 40mm |

| Accuracy Class | |
|---|---|
| P | C5 Precision |
| C | C7 Accuracy |

| Stroke (mm) |
|---|
| 100-1,500mm |

| Motor Connection | |
|---|---|
| BA | Basic |
| BC | Inline |
| BR | Right Side |
| BL | Left Side |
| M | Built In |

| Motor Type | | Motor Power | |
|---|---|---|---|
| M | Mach Motion | 40 | 400W |
| Z | Client's Motor | 75 | 750W |
| Brake | | | |
| B | With Brake | None (No B) | No Brake |

| Sensor Switch | |
|---|---|
| 2 | 2 Pcs |
| 3 | 3 Pcs |

| Sensor Type | |
|---|---|
| P | PNP |
| None (No P) | NPN |

| Original Sensor Position | |
|---|---|
| External | |
| C | Motor Side |
| D | Opposite Motor Side |
| E | No Sensor |

## Technical Specifications

| | | | | | |
|---|---|---|---|---|---|
| Motor Power (W) | | 400W / 750W | | | |
| Ball Screw Diameter (mm) | | C7 | | 20 | |
| | | C5 | | 20 | |
| Repeatability (mm) | | C7 | | ± 0.01 | |
| | | C5 | | ± 0.006 | |
| Ball Screw Lead (mm) | | 5 | 10 | 20 | 40 |
| Max. Speed (mm/sec) 3000 Motor Speed (rpm/min) | | 250 | 500 | 1,000 | 2,000 |
| Maximum Payload (kg) | Horizontal | 110/115 | 100/105 | 70/80 | 30/50 |
| | Vertical | 40/45 | 29/35 | 14/20 | 5/10 |
| Rated Thrust (N) | | 1,388/2,565 | 694/1,281 | 347/640 | 170/320 |
| Linear Guide (mm) | | 20 x 15.5 - 2 | | | |
| Coupling (mm) Motor Side x Ball Screw Side | | 14 x 12 | | 19 x 12 | |
| Motor Output | | 400W | | 750W | |
| Home Sensor - Outside | | EE-SX672(NPN) | | EE-SX672P(PNP) | |
| Home Sensor - Outside Guide | | EE-SX674(NPN) | | EE-SX674P(PNP) | |

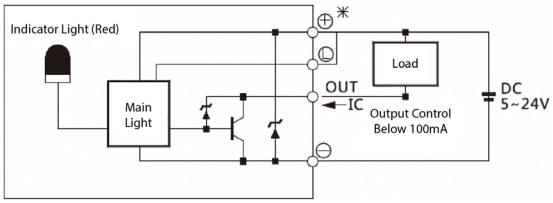


**Notes:**

**1. Motor acceleration and deceleration value is set to 0.2 seconds.**

**2. Repeatability is within 300mm stroke - longer stroke will result in lower value.**

**3. If stroke of 600mm+ leads to swing of ball screw, please reduce speed by 15%.**

## Maximum Static Torque

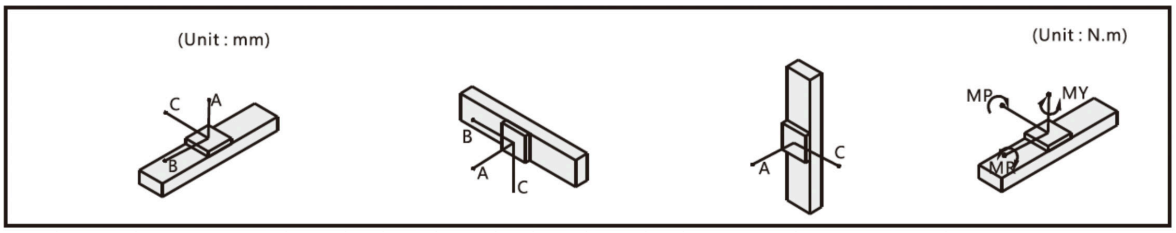


| Horizontal Installation | | A | B | C |
|---|---|---|---|---|
| Lead 5 | 55kg | 2,235 | 327 | 433 |
| | 95kg | 1,500 | 156 | 249 |
| | 115kg | 1,385 | 152 | 202 |
| Lead 10 | 55kg | 1,830 | 321 | 428 |
| | 70kg | 1,508 | 190 | 252 |
| | 90kg | 1,389 | 156 | 206 |
| Lead 20 | 25kg | 1,989 | 675 | 746 |
| | 45kg | 1,332 | 395 | 445 |
| | 78kg | 1,047 | 238 | 201 |

| Wall Installation | | A | B | C |
|---|---|---|---|---|
| Lead 5 | 55kg | 378 | 263 | 1,829 |
| | 95kg | 208 | 124 | 1,497 |
| | 115kg | 163 | 89 | 1,377 |
| Lead 10 | 55kg | 400 | 265 | 1,831 |
| | 70kg | 220 | 135 | 1,508 |
| | 90kg | 173 | 100 | 1,389 |
| Lead 20 | 25kg | 737 | 612 | 1,930 |
| | 45kg | 427 | 332 | 1,260 |
| | 78kg | 253 | 174 | 944 |

| Vertical Installation | | A | C |
|---|---|---|---|
| Lead 5 | 15kg | 1,133 | 915 |
| | 25kg | 908 | 743 |
| | 45kg | 745 | 722 |
| Lead 10 | 10kg | 1,334 | 1,334 |
| | 20kg | 788 | 788 |
| | 35kg | 563 | 563 |
| Lead 20 | 1kg | 1,265 | 1,265 |
| | 5kg | 1,114 | 1,114 |
| | 20kg | 489 | 489 |

| Max. Static Torque | | |
|---|---|---|
| MY | MP | MR |
| 784 | 788 | 691 |

Mach Motion Products

## BA (Basic):

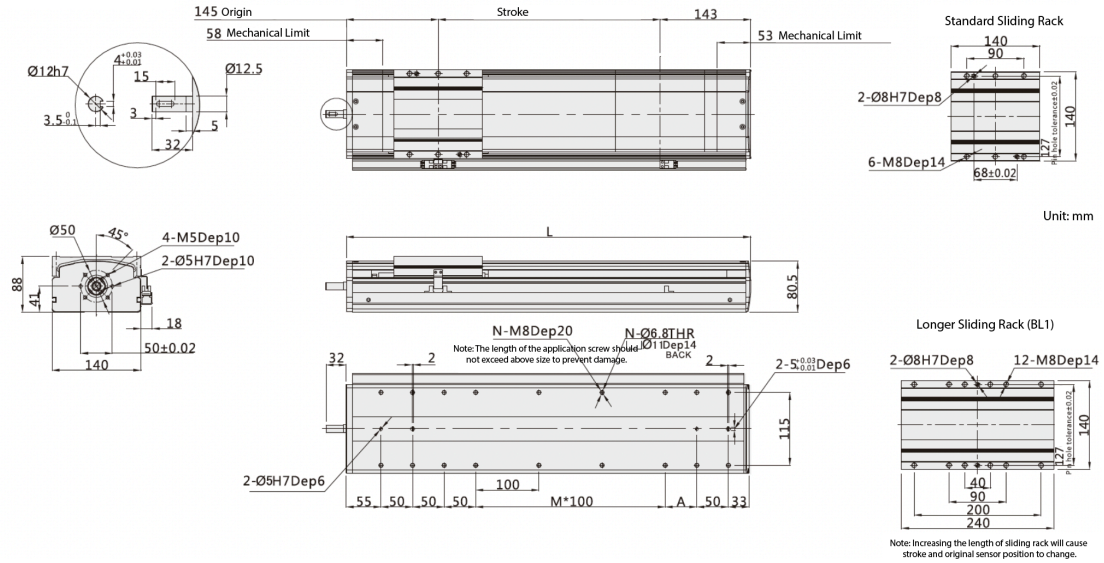


| Working Stroke | 100 | 150 | 200 | 250 | 300 | 350 | 400 | 450 | 500 | 550 | 600 | 650 | 700 | 750 | 800 | 850 | 900 | 950 | 1,000 | 1,050 | 1,100 | 1,150 | 1,200 | 1,250 | 1,300 | 1,350 | 1,400 | 1,450 | 1,500 |
|---|---|---|---|---|---|---|---|---|---|---|---|---|---|---|---|---|---|---|---|---|---|---|---|---|---|---|---|---|---|
| L | 388 | 438 | 488 | 538 | 588 | 638 | 688 | 738 | 788 | 838 | 888 | 938 | 988 | 1,038 | 1,088 | 1,138 | 1,188 | 1,238 | 1,288 | 1,338 | 1,388 | 1,438 | 1,488 | 1,538 | 1,588 | 1,638 | 1,688 | 1,738 | 1,788 |
| M | 0 | 1 | 1 | 2 | 2 | 3 | 3 | 4 | 4 | 5 | 5 | 6 | 6 | 7 | 7 | 8 | 8 | 9 | 9 | 10 | 10 | 11 | 11 | 12 | 12 | 13 | 13 | 14 | 14 |
| N | 12 | 14 | 14 | 14 | 16 | 18 | 18 | 20 | 20 | 22 | 22 | 24 | 24 | 26 | 26 | 28 | 28 | 30 | 30 | 32 | 32 | 34 | 34 | 36 | 36 | 38 | 38 | 40 | 40 |
| A | 100 | 50 | 100 | 50 | 100 | 50 | 100 | 50 | 100 | 50 | 100 | 50 | 100 | 50 | 100 | 50 | 100 | 50 | 100 | 50 | 100 | 50 | 100 | 50 | 100 | 50 | 100 | 50 | 100 |
| kg | 9.4 | 10.1 | 10.8 | 11.5 | 12.2 | 12.9 | 13.6 | 14.3 | 15 | 15.7 | 16.4 | 17.1 | 17.8 | 18.5 | 19.2 | 19.9 | 20.6 | 21.3 | 22 | 22.7 | 23.4 | 24.1 | 24.8 | 25.5 | 26.2 | 26.9 | 27.6 | 28.3 | 29 |

Note: does not include motor weight. Please contact orders@machmo.com for assistance if a custom stroke outside of above parameters is needed.

## BC (Inline):

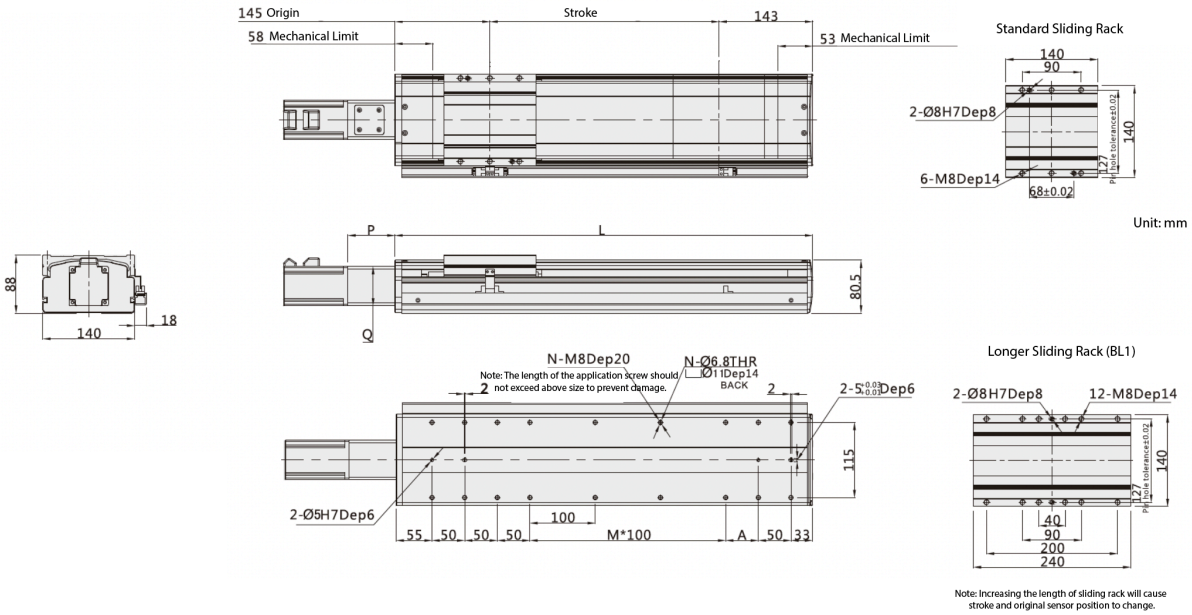


| Working Stroke | 100 | 150 | 200 | 250 | 300 | 350 | 400 | 450 | 500 | 550 | 600 | 650 | 700 | 750 | 800 | 850 | 900 | 950 | 1,000 | 1,050 | 1,100 | 1,150 | 1,200 | 1,250 | 1,300 | 1,350 | 1,400 | 1,450 | 1,500 |
|---|---|---|---|---|---|---|---|---|---|---|---|---|---|---|---|---|---|---|---|---|---|---|---|---|---|---|---|---|---|
| L | 388 | 438 | 488 | 538 | 588 | 638 | 688 | 738 | 788 | 838 | 888 | 938 | 988 | 1,038 | 1,088 | 1,138 | 1,188 | 1,238 | 1,288 | 1,338 | 1,388 | 1,438 | 1,488 | 1,538 | 1,588 | 1,638 | 1,688 | 1,738 | 1,788 |
| M | 0 | 1 | 1 | 2 | 2 | 3 | 3 | 4 | 4 | 5 | 5 | 6 | 6 | 7 | 7 | 8 | 8 | 9 | 9 | 10 | 10 | 11 | 11 | 12 | 12 | 13 | 13 | 14 | 14 |
| N | 12 | 14 | 14 | 14 | 16 | 18 | 18 | 20 | 20 | 22 | 22 | 24 | 24 | 26 | 26 | 28 | 28 | 30 | 30 | 32 | 32 | 34 | 34 | 36 | 36 | 38 | 38 | 40 | 40 |
| A | 100 | 50 | 100 | 50 | 100 | 50 | 100 | 50 | 100 | 50 | 100 | 50 | 100 | 50 | 100 | 50 | 100 | 50 | 100 | 50 | 100 | 50 | 100 | 50 | 100 | 50 | 100 | 50 | 100 |
| kg | 10.1 | 10.8 | 11.5 | 12.2 | 12.9 | 13.6 | 14.3 | 15 | 15.7 | 16.4 | 17.1 | 17.8 | 18.5 | 19.2 | 19.9 | 20.6 | 21.3 | 22 | 22.7 | 23.4 | 24.1 | 24.8 | 25.5 | 26.2 | 26.9 | 27.6 | 28.3 | 29 | 29.7 |

Note: does not include motor weight. Please contact orders@machmo.com for assistance if a custom stroke outside of above parameters is needed.

## BL (Left Side):

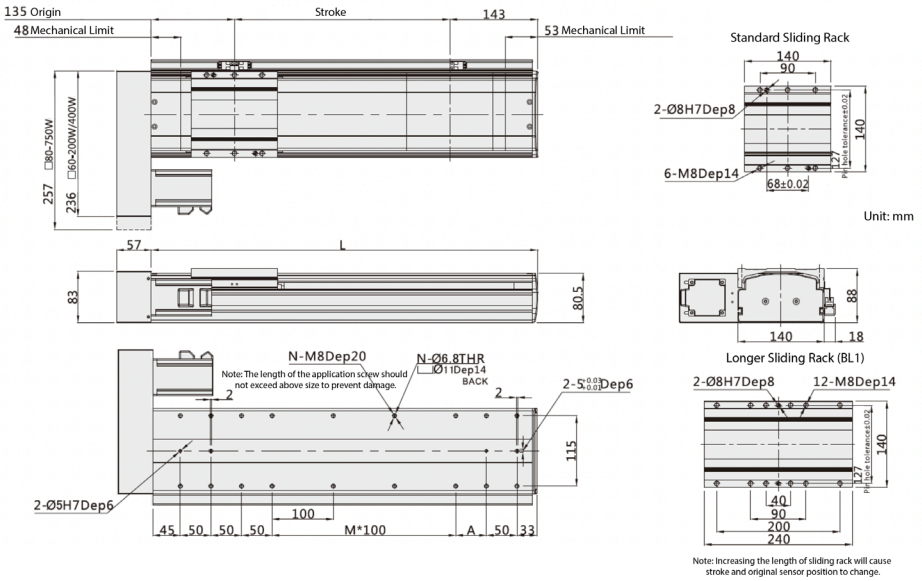


| Working Stroke | 100 | 150 | 200 | 250 | 300 | 350 | 400 | 450 | 500 | 550 | 600 | 650 | 700 | 750 | 800 | 850 | 900 | 950 | 1,000 | 1,050 | 1,100 | 1,150 | 1,200 | 1,250 | 1,300 | 1,350 | 1,400 | 1,450 | 1,500 |
|---|---|---|---|---|---|---|---|---|---|---|---|---|---|---|---|---|---|---|---|---|---|---|---|---|---|---|---|---|---|
| L | 378 | 428 | 478 | 528 | 578 | 628 | 678 | 728 | 778 | 828 | 878 | 928 | 978 | 1,028 | 1,078 | 1,128 | 1,178 | 1,228 | 1,278 | 1,328 | 1,378 | 1,428 | 1,478 | 1,528 | 1,578 | 1,628 | 1,678 | 1,728 | 1,778 |
| M | 0 | 1 | 1 | 2 | 2 | 3 | 3 | 4 | 4 | 5 | 5 | 6 | 6 | 7 | 7 | 8 | 8 | 9 | 9 | 10 | 10 | 11 | 11 | 12 | 12 | 13 | 13 | 14 | 14 |
| N | 12 | 14 | 14 | 14 | 16 | 18 | 18 | 20 | 20 | 22 | 22 | 24 | 24 | 26 | 26 | 28 | 28 | 30 | 30 | 32 | 32 | 34 | 34 | 36 | 36 | 38 | 38 | 40 | 40 |
| A | 100 | 50 | 100 | 50 | 100 | 50 | 100 | 50 | 100 | 50 | 100 | 50 | 100 | 50 | 100 | 50 | 100 | 50 | 100 | 50 | 100 | 50 | 100 | 50 | 100 | 50 | 100 | 50 | 100 |
| kg | 11 | 11.7 | 12.4 | 13.1 | 13.8 | 14.5 | 15.2 | 15.9 | 16.6 | 17.3 | 18 | 18.7 | 19.4 | 20.1 | 20.8 | 21.5 | 22.2 | 22.9 | 23.6 | 24.3 | 25 | 25.7 | 26.4 | 27.1 | 27.8 | 28.5 | 29.2 | 29.9 | 30.6 |

Note: does not include motor weight. Please contact orders@machmo.com for assistance if a custom stroke outside of above parameters is needed.

## BR (Right Side):

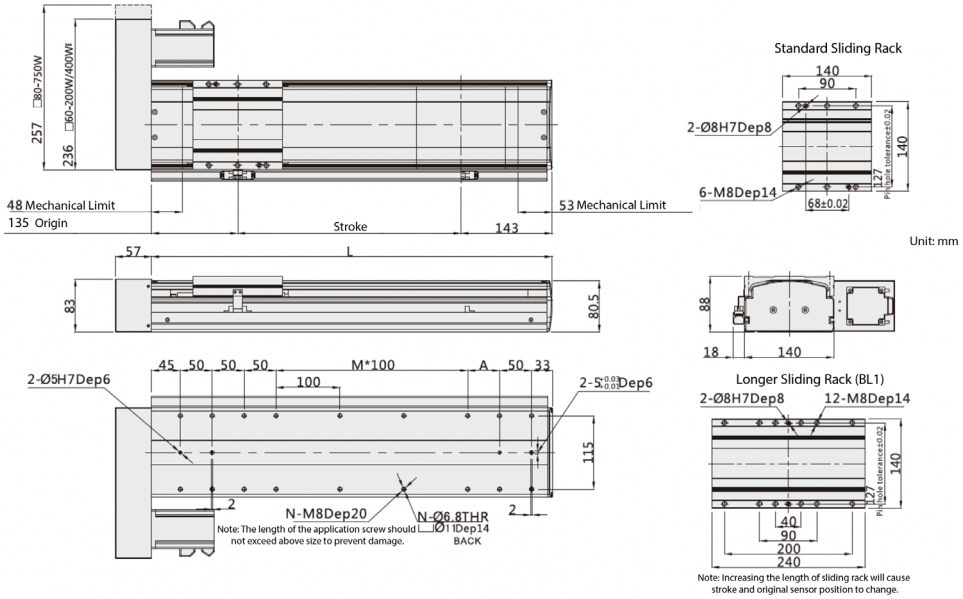


| Working Stroke | 100 | 150 | 200 | 250 | 300 | 350 | 400 | 450 | 500 | 550 | 600 | 650 | 700 | 750 | 800 | 850 | 900 | 950 | 1,000 | 1,050 | 1,100 | 1,150 | 1,200 | 1,250 | 1,300 | 1,350 | 1,400 | 1,450 | 1,500 |
|---|---|---|---|---|---|---|---|---|---|---|---|---|---|---|---|---|---|---|---|---|---|---|---|---|---|---|---|---|---|
| L | 378 | 428 | 478 | 528 | 578 | 628 | 678 | 728 | 778 | 828 | 878 | 928 | 978 | 1,028 | 1,078 | 1,128 | 1,178 | 1,228 | 1,278 | 1,328 | 1,378 | 1,428 | 1,478 | 1,528 | 1,578 | 1,628 | 1,678 | 1,728 | 1,778 |
| M | 0 | 1 | 1 | 2 | 2 | 3 | 3 | 4 | 4 | 5 | 5 | 6 | 6 | 7 | 7 | 8 | 8 | 9 | 9 | 10 | 10 | 11 | 11 | 12 | 12 | 13 | 13 | 14 | 14 |
| N | 12 | 14 | 14 | 14 | 16 | 18 | 18 | 20 | 20 | 22 | 22 | 24 | 24 | 26 | 26 | 28 | 28 | 30 | 30 | 32 | 32 | 34 | 34 | 36 | 36 | 38 | 38 | 40 | 40 |
| A | 100 | 50 | 100 | 50 | 100 | 50 | 100 | 50 | 100 | 50 | 100 | 50 | 100 | 50 | 100 | 50 | 100 | 50 | 100 | 50 | 100 | 50 | 100 | 50 | 100 | 50 | 100 | 50 | 100 |
| kg | 11 | 11.7 | 12.4 | 13.1 | 13.8 | 14.5 | 15.2 | 15.9 | 16.6 | 17.3 | 18 | 18.7 | 19.4 | 20.1 | 20.8 | 21.5 | 22.2 | 22.9 | 23.6 | 24.3 | 25 | 25.7 | 26.4 | 27.1 | 27.8 | 28.5 | 29.2 | 29.9 | 30.6 |

Note: does not include motor weight. Please contact orders@machmo.com for assistance if a custom stroke outside of above parameters is needed.

## M (Built In):

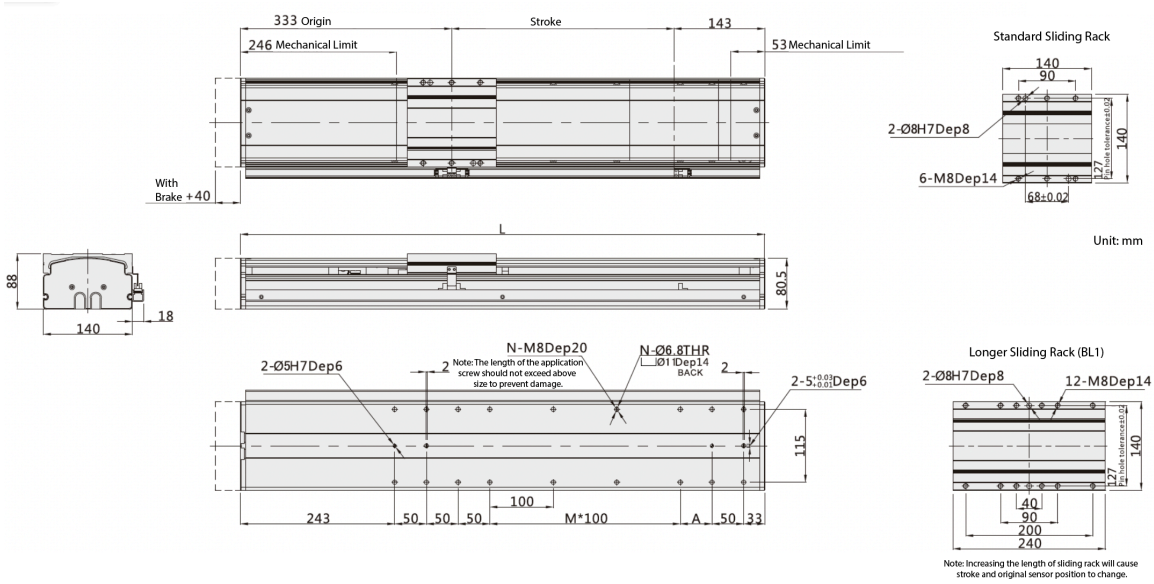


| Working Stroke | 100 | 150 | 200 | 250 | 300 | 350 | 400 | 450 | 500 | 550 | 600 | 650 | 700 | 750 | 800 | 850 | 900 | 950 | 1,000 | 1,050 | 1,100 | 1,150 | 1,200 | 1,250 | 1,300 | 1,350 | 1,400 | 1,450 | 1,500 |
|---|---|---|---|---|---|---|---|---|---|---|---|---|---|---|---|---|---|---|---|---|---|---|---|---|---|---|---|---|---|
| L | 576 | 626 | 676 | 726 | 776 | 826 | 876 | 926 | 976 | 1,026 | 1,076 | 1,126 | 1,176 | 1,226 | 1,276 | 1,326 | 1,376 | 1,426 | 1,476 | 1,526 | 1,576 | 1,626 | 1,676 | 1,726 | 1,776 | 1,826 | 1,876 | 1,926 | 1,976 |
| M | 0 | 1 | 1 | 2 | 2 | 3 | 3 | 4 | 4 | 5 | 5 | 6 | 6 | 7 | 7 | 8 | 8 | 9 | 9 | 10 | 10 | 11 | 11 | 12 | 12 | 13 | 13 | 14 | 14 |
| N | 12 | 14 | 14 | 14 | 16 | 18 | 18 | 20 | 20 | 22 | 22 | 24 | 24 | 26 | 26 | 28 | 28 | 30 | 30 | 32 | 32 | 34 | 34 | 36 | 36 | 38 | 38 | 40 | 40 |
| A | 100 | 50 | 100 | 50 | 100 | 50 | 100 | 50 | 100 | 50 | 100 | 50 | 100 | 50 | 100 | 50 | 100 | 50 | 100 | 50 | 100 | 50 | 100 | 50 | 100 | 50 | 100 | 50 | 100 |
| kg | 10.8 | 11.5 | 12.2 | 12.9 | 13.6 | 14.3 | 15 | 15.7 | 16.4 | 17.1 | 17.8 | 18.5 | 19.2 | 19.9 | 20.6 | 21.3 | 22 | 22.7 | 23.4 | 24.1 | 24.8 | 25.5 | 26.2 | 26.9 | 27.6 | 28.3 | 29 | 29.7 | 30.4 |

Please contact orders@machmo.com for assistance if a custom stroke outside of above parameters is needed.